AIR-RITE MANUFACTURING, LLC

540 WEST 600 SOUTH BOUNTIFUL, UTAH 84010
PHONE: 801-295-2529 FAX: 801-295-8854
TOLL FREE: 866-486-2529

WWW.AIR-RITEMFG.COM

AIR-RITE MANUFACTURING

PRODUCT CATALOG

2017

AIR-RITE MANUFACTURING, LLC

540 WEST 600 SOUTH BOUNTIFUL, UTAH 84010

PHONE: 801-295-2529 FAX: 801-295-8854

TOLL FREE: 801-866-483-2529

WWW.AIR-RITEMFG.COM

PRODUCT CATALOG

2017

GENERAL SALES CONDITIONS

AHU CURBS

ROOF CURBS

CURB ADAPTORS

MANUAL VOLUME DAMPERS

BACKDRAFT DAMPERS

ADAPTORS

ROOF HOODS

SIDE TAKE-OFFS

DUCT ACCESS DOORS

LOUVERS

PENTHOUSES

BURGLAR BARS

SLOT DIFFUSER PLENUMS

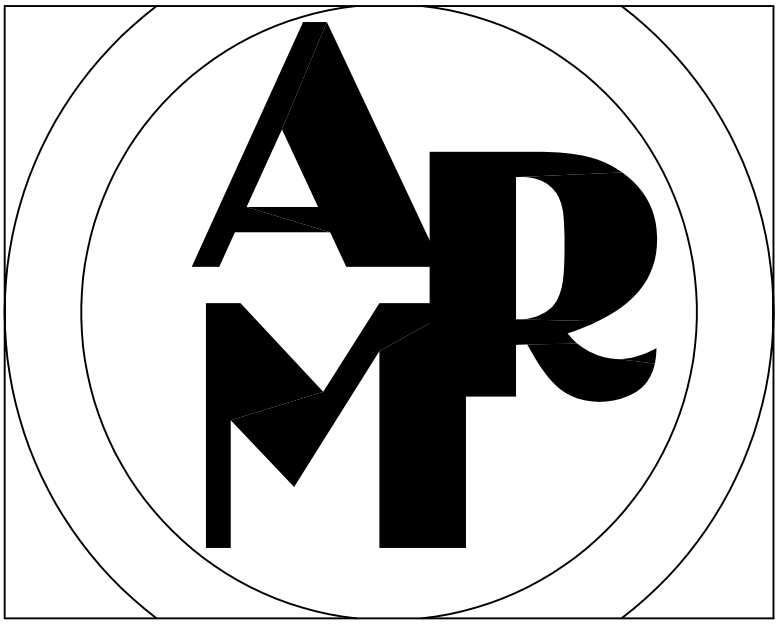

AIR-RITE MANUFACTURING, LLC

GENERAL SALES CONDITIONS

AIR-RITE MANUFACTURING, LLC
GENERAL SALES AND CONDITIONS

Placing Orders:

ORDERS TO AIR-RITE MANUFACTURING, LLC CAN BE PLACED EITHER BY TELEPHONE, FAX OR E-MAIL.

TO PLACE AN ORDER BY TELEPHONE, PLEASE CALL (801) 295-2529 OR TOLL FREE (866) 483-2529. PLEASE NOTE THAT ALL TELEPHONE ORDERS MUST BE CONFIRMED IN WRITING, EITHER BY FAX OR E-MAIL TO AIR-RITE MANUFACTURING BY THE END OF THE NEXT BUSINESS DAY OR THEY WILL NOT BE PROCESSED FOR SHIPPING.

TO PLACE AN ORDER BY FAX, PLEASE USE OUR FAX NUMBER (801) 295-8854

TO PLACE AN ORDER VIA E-MAIL, PLEASE SEND TO COLLIN SMITH AT CSMITH@CTROL.COM.

IF PLACING AN ORDER FOR ALL NON-STANDARD ITEMS, PLEASE DESIGNATE ON YOUR PURCHASE ORDER EXACTLY HOW THE ITEM IS TO BE BUILT. FOR EXAMPLE, IF A CURB IS TO BE PITCHED, PLEASE INDICATE THE EXACT PITCH THAT IS REQUIRED. IF THE NON-STANDARD ITEMS ARE NOT SHOWN ON THE PURCHASE ORDER, IT WILL BE BUILT TO THE STANDARD CONSTRUCTION SPECIFICATIONS SHOWN ON THE SUBMITTAL/ FABRICATION DETAIL IN OUR CATALOG.

CHANGING OR ALTERNATING AN EXISTING ORDER MUST BE IN WRITING BEFORE FABRICATION BEGINS. PLEASE CONTACT FACTORY AS SOON AS POSSIBLE IF A CHANGE IS NEEDED.

FOR ALL CATALOGED PRODUCTS THAT HAVE NO CORRESPONDING PRICE SHEET PLEASE CONTACT THE FACTORY FOR PROPER PRICING.

PRICING

ALL PRICING IS BASED UPON THE CURRENT PRICE SHEETS CONTAINED IN YOUR PRODUCT CATALOG WITH APPICABLE MULTIPLIERS. PLEASE CONTACT THE FACTORY FOR PRICING CLARIFICATIONS OR CURRENT PRICING STRUCTURES.

THERE IS A MINIMUM ORDER AMOUNT OF $50.00 ON ALL ORDERS PLACED WITH AIR-RITE MANUFACTURING, LLC.

ALL SPECIAL JOBS QUOTED BY THE FACTORY ARE GOOD FOR 30 DAYS FROM THE ACTUAL QUOTE.

PLEASE CONSULT AIR-RITE MANUFACTURING FOR SPECIAL PRICING OR CLARIFICATIONS.

QUICK SHIP PROGRAM:

PLEASE NOTE TO SECURE ANY QUICK SHIP NEEDS PLEASE CONTACT THE FACTORY FOR APPROVAL.

STANDARD LEAD TIME IS 5-10 WORKING DAYS.

OUR QUICKSHIP PROGRAM IS AS FOLLOWS:

5 DAY SHIPMENTS (TO BE ADDED TO FINAL PRICING)	20%
72 HOUR SHIPMENTS (TO BE ADDED TO FINAL PRICING)	30%
48 HOUR SHIPMENTS (TO BE ADDED TO FINAL PRICING)	40%
24 HOUR SHIPMENTS (TO BE ADEED TO FINAL PRICING)	50%

DUE TO THE HIGH VOLUME OF WORK, THE QUICK SHIP PROGRAM IS NOT ALWAYS AVAILABLE. PLEASE CONTACT AIR-RITE MANUFACTURING FOR AUTHORIZATION BEFORE PLACING A QUICK SHIP ORDER. NO QUICK SHIP ORDERS WILL BE ACCEPTED WITHOUT PRIOR APPROVAL BY THE FACTORY.

STOCK PROGRAM:

AIR-RITE MANUFACTURING, LLC IS A MADE TO ORDER MANUFACTURE AND DOES NOT CARRY STOCK. ALL SALES ARE FINAL. AIR-RITE MANUFACTURING, LLC DOES NOT ACCEPT RETURNS.

SHIPPING:

ALL SHIPMENTS ARE F.O.B AIR-RITE- MANUFACTURING, LLC, BOUNTIFUL, UTAH 84010.

ALL ORDERS WILL BE SHIPPED ON COMMON CARRIERS, UPS OR OUR OWN TRUCKS. ALL ORDERS WILL BE SHIP PRE-PAID AND ADD, 3RD PARTY OR COLLECT. PLEASE DESIGNATE THE PEFERRED METHOD ON YOUR PURCHASE ORDER.

AIR-RITE MANUFACTURING, LLC IS NOT RESPONSIBLE FOR LOST OR DAMAGED SHIPMENTS CAUSED BY FREIGHT COMPANIES. WHEN SHIPMENT IS IS RECEIVED, PLEASE CHECK ORDER FOR DAMAGES, INCLUDING ANY AND ALL HIDDEN DAMAGES.

IT IS THE RESPONSIBILITY OF THE CONSIGNEE TO FILE THE FREIGT CLAIM ON ANY SHIPMENTS ACCEPTED BY THEM. IT WILL BE THE RESPONSIBILITY OF AIR-RITE MANUFACTURING, LLC TO FILE FREIGHT CLAIMS ON ANY ORDERS REJECTED BY THE CONSIGNEE.

GUARANTEE:

ALL ORDERS IN THIS CATALOG ARE MADE TO ORDER. WE WILL NOT ACCEPT RETURNS WITHOUT PRIOR APPROVAL.

ALL PRODUCTS CONTAINED IN THIS CATALOG ARE GUARNTEED TO BE FREE FROM ORIGINAL DEFECTS IN WORKMANSHIP AND/OR MATERIALS FOR A PERIOD OF ONE (1) YEAR FROM THE DATE OF SHIPMENT FROM OUR FACTORY, UNDER NORMAL USAGE OR SERVICE. AIR-RITE MANUFACTURING, LLC WILL REPLACE OR CORRECT ANY DEFECTIVE PART(S) OR ITEM(S) AFTER RETURNING TO OUR BOUNTIFUL, UTAH FACTORY. FREIGHT PRE-PAID AND AFTER EXAMINATION DISCLOSES DEFECTS IN THE ORIGINAL MANUFACTURING OF THE PRODUCT.

THIS GUARANTEE WILL IN NO WAY INCLUDE PAYMENT OF LABOR CHARGES FOR THE FIELD REPLACEMENT OF DEFECTIVE PARTS, INSTALLATION, REPAIRS, ADJUSTMENTS, OR ANY WORK DONE. ANY ITEM(S) AQUIRED FROM AIR-RITE MANUFACTURING, LLC MUST BE VERIFIED BY THOSE RESPONSIBLE PRIOR TO INSTALLATION. SIZE AND QUALITY ISSUES MUST BE ADDRESSED BEFORE INSTALLATION OF ANY ITEM TAKES PLACE. AIR-RITE MANUFACTURING, LLC ACCEPTS NO RESPONSIBILITY IF THESE ISSUES ARE NOT ADDRESSED.

AIR-RITE MANUFACTURING, LLC WILL NOT BE RESPONSIBLE FOR PROJECT SPECIFICATIONS. IT IS THE CUSTOMERS RESPONSIBILITY TO VERIFY THAT THE PURCHASE OR SUBMITTED AIR-RITE PRODUCT(S) MEETS THE SPECIFICATIONS OF THE PROJECT IN WHICH THE ITEM(S) WILL BE USED.

BACK CHARGES WILL NOT BE ACCEPTED FOR ANY REASON WITHOUT THE PRIOR WRITTEN APPROVAL OF AIR-RITE MANUFACTURING, LLC.

AIR-RITE MANUFACTURING, LLC RESERVES THE RIGHT TO CHANGE THE PRODUCT SPECIFICATIONS WITHOUT PRIOR NOTIFICATION.

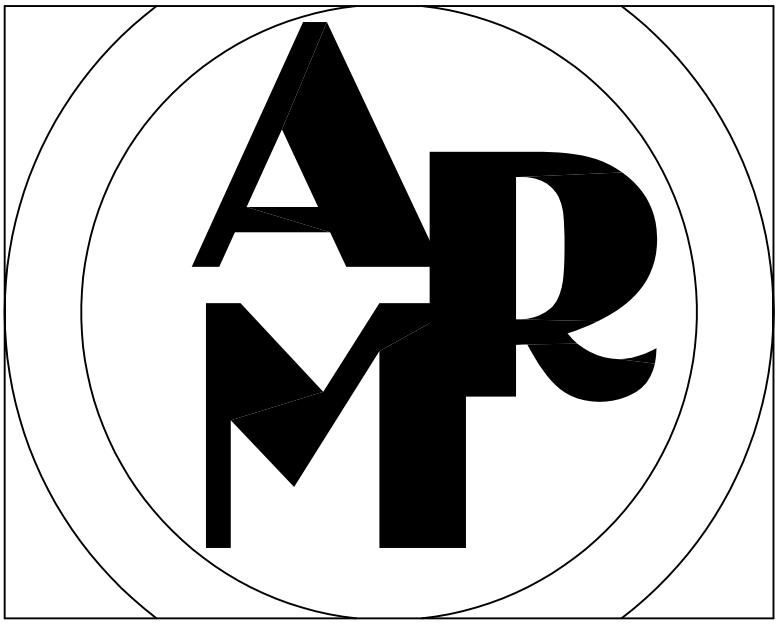

AIR-RITE MANUFACTURING, LLC

AHU CURBS

AIR-RITE MANUFACTURING

SUBMITTAL/FABRICATION DETAIL: COMBINATION CURB
MODEL: AHU-1

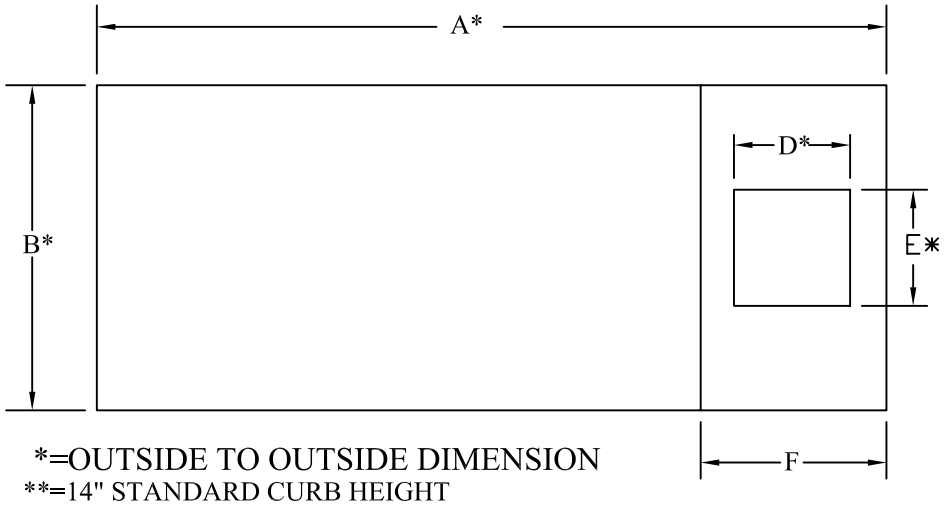

*=OUTSIDE TO OUTSIDE DIMENSION
**=14" STANDARD CURB HEIGHT

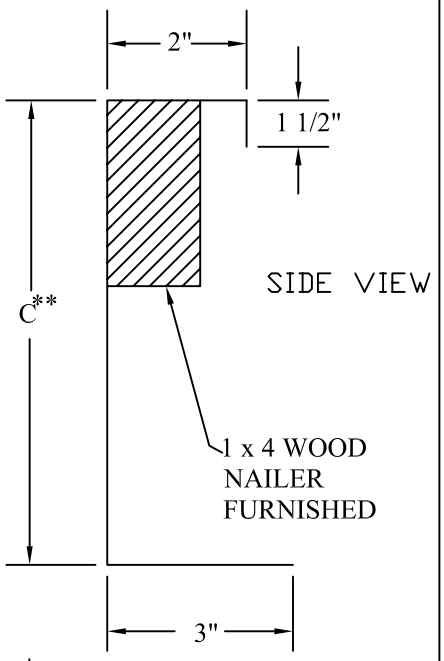

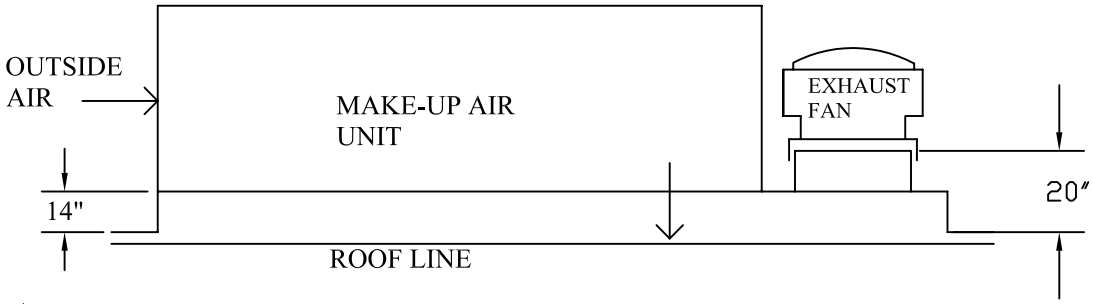

A=_____
B=_____
C=_____
D=_____
E=_____
F=_____
G=_____
H=_____

Standard Construction

-18 Gauge sheet metal with welded corners.
-1 x 4 wood nailer strip.

Optional Construction

☐ -20 ga. sound cover over compressor section of curb.
☐ -Rectangular curbs.
☐ -Height additions.
☐ -Pitched curbs (specify pitch when ordering).
☐ -Bolted corners for KD shipping.
☐ -Burgular bars.
☐ -Foam mounting gasket.
☐ -Accoustic liner

Union "Blue Label" Made.

PROJECT NAME:	
ENGINEER:	
TAG #:	
CONTRACTOR:	
SUBMITTED BY:	

PAGE: AHU-1

AIR-RITE MFG. RESERVES THE RIGHT TO CHANGE SPECIFICATIONS WITHOUT NOTICE.

AIR-RITE MANUFACTURING

SUBMITTAL/FABRICATION DETAIL: COMBINATION CURB
MODEL: AHU-1B

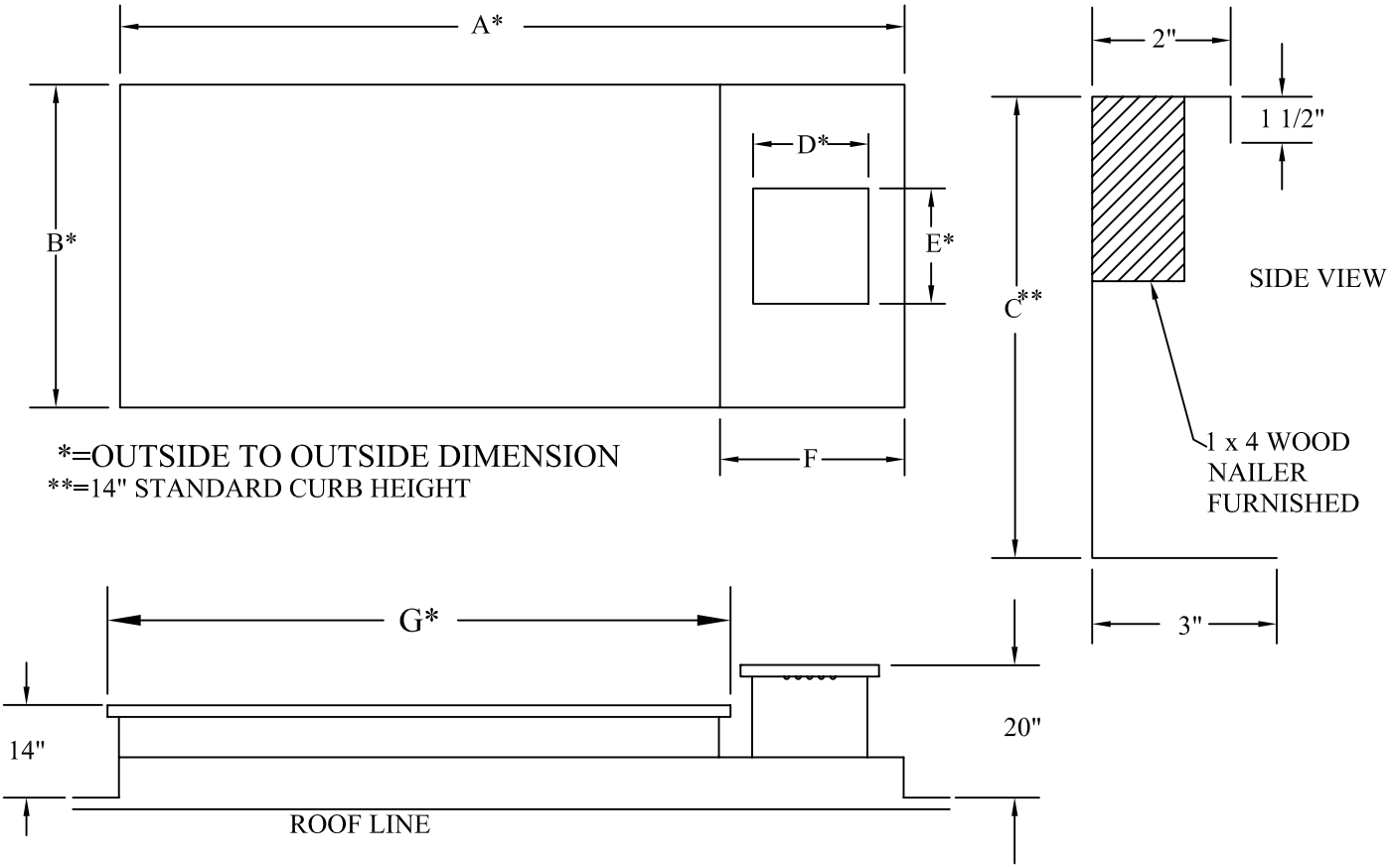

A=_____
B=_____
C=_____
D=_____
E=_____
F=_____
G=_____
H=_____

Standard Construction

-18 Gauge sheet metal with welded corners.
-1 x 4 wood nailer strip.

Optional Construction

☐ -20 ga. sound cover over compressor section of curb.
☐ -Rectangular curbs.
☐ -Height additions.
☐ -Pitched curbs (specify pitch when ordering).
☐ -Bolted corners for KD shipping.
☐ -Burgular bars.
☐ -Foam mounting gasket.
☐ -Accoustic liner

Union "Blue Label" Made.

PROJECT NAME:	
ENGINEER:	
TAG #:	
CONTRACTOR:	
SUBMITTED BY:	

PAGE: AHU-1B

AIR-RITE MFG. RESERVES THE RIGHT TO CHANGE SPECIFICATIONS WITHOUT NOTICE.

AIR-RITE MANUFACTURING

SUBMITTAL/FABRICATION DETAIL
MODEL: AHU-2

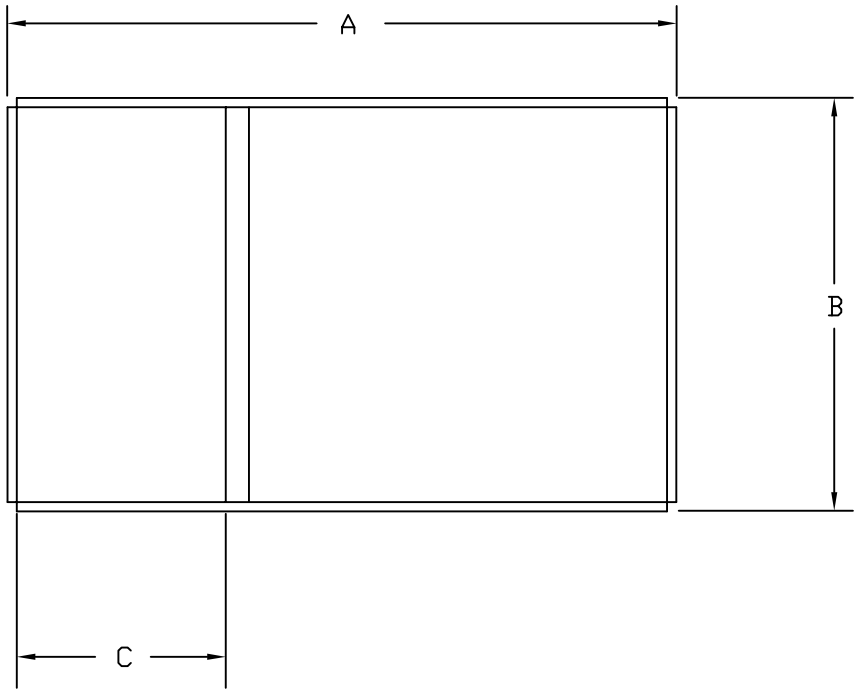

*=OUTSIDE TO OUTSIDE DIMENSION
**14" STANDARD CURB HEIGHT

A = _____
B = _____
C = _____

Standard Construction

-18 Gauge sheet metal with welded corners.
-1 x 4 wood nailer strip.

Optional Construction

☐ -20 ga. sound cover over compressor section of curb.
☐ -Rectangular curbs.
☐ -Height additions.
☐ -Pitched curbs (specify pitch when ordering).
☐ -Bolted corners for KD shipping.
☐ -Burgular bars.
☐ -Foam mounting gasket.
☐ -Accoustic liner

Union "Blue Label" Made.

PROJECT NAME:
W/O #:
TAG #:
CONTRACTOR:
SUBMITTED BY:

PAGE: AHU-2

AIR-RITE MFG. RESERVES THE RIGHT TO CHANGE SPECIFICATIONS WITHOUT NOTICE.

AIR-RITE MANUFACTURING

SUBMITTAL/FABRICATION DETAIL: STANDARD CURB
MODEL: AHU-3

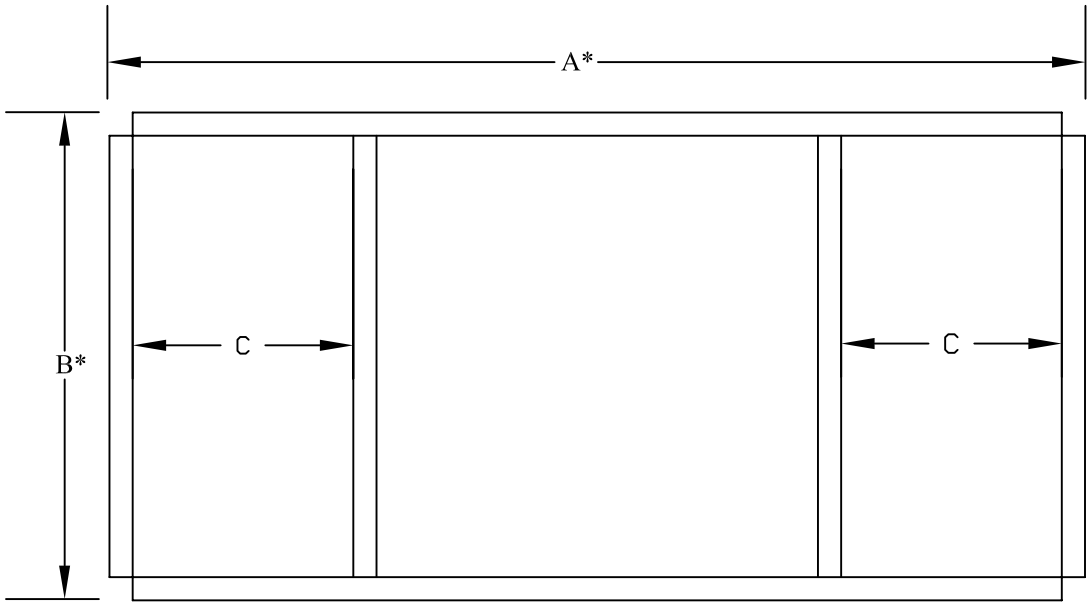

*=OUTSIDE TO OUTSIDE DIMENSION

A=_____
B=_____
C=_____
D=_____
E=_____
F=_____
G=_____
H=_____

HEIGHT: _____

MATERIAL: _____

Standard Construction

-18 Gauge sheet metal with welded corners.
-1 x 4 wood nailer strip.

Optional Construction

☐ -20 ga. sound cover over compressor section of curb.
☐ -Rectangular curbs.
☐ -Height additions.
☐ -Pitched curbs (specify pitch when ordering).
☐ -Bolted corners for KD shipping.
☐ -Burgular bars.
☐ -Foam mounting gasket.
☐ -Accoustic liner

Union "Blue Label" Made.

PROJECT NAME:
W/O #:
TAG #:
CONTRACTOR:
SUBMITTED BY:

PAGE: AHU-3

AIR-RITE MFG. RESERVES THE RIGHT TO CHANGE SPECIFICATIONS WITHOUT NOTICE.

AIR-RITE MANUFACTURING

MODEL: MAU / AHU ROOF CURBS

PLEASE CONTACT THE FACTORY FOR QUOTES AND PRICING ON ALL AHU / MAU CURB MODELS.

PRICING FROM FACTORY IS BASED UPON 18 GUAGE GALVANIZED SHEET METAL CONSTRUCTION AND THE STANDARD HEIGHT OF 14", UNLESS OTHERWISE NOTED ON THE QUOTE.

THE PRICE QUOTE IS BASED UPON AIR-RITE MANUFACTURING STANDARD LEAD TIME OF 10 - 12 WORKING DAYS.

AHU / MAU OPTIONAL CONSTRUCTION PRICING

PLEASE ADD THE FOLLOWING TO YOUR QUOTE FOR ANY AND ALL CHANGES FROM OUR STANDARD QUOTE:

16 GUAGE GALVANIZED STEEL CONSTRUCTION ADD:		35%
ALUMINUM CONSTRUCTION ADD:		40%
NON-STANDARD HEIGHT ADD:		
	16"	30%
	20"	40%
	24"	50%
	HEIGHTS TALLER THAN 24"	CONSULT FACTORY
PITCHED CURB ADD:		
	0" THRU 2" IN 12"	30%
	3" THRU 4" IN 12"	45%
	5" THRU 6" IN 12"	60%
	7" IN 12" AND OVER	CONSULT FACTORY
FOAM MOUNTING GASKET ADD:		5%

AIR-RITE MFG. RESERVES THE RIGHT TO CHANGE SPECIFICATIONS WITHOUT NOTICE.

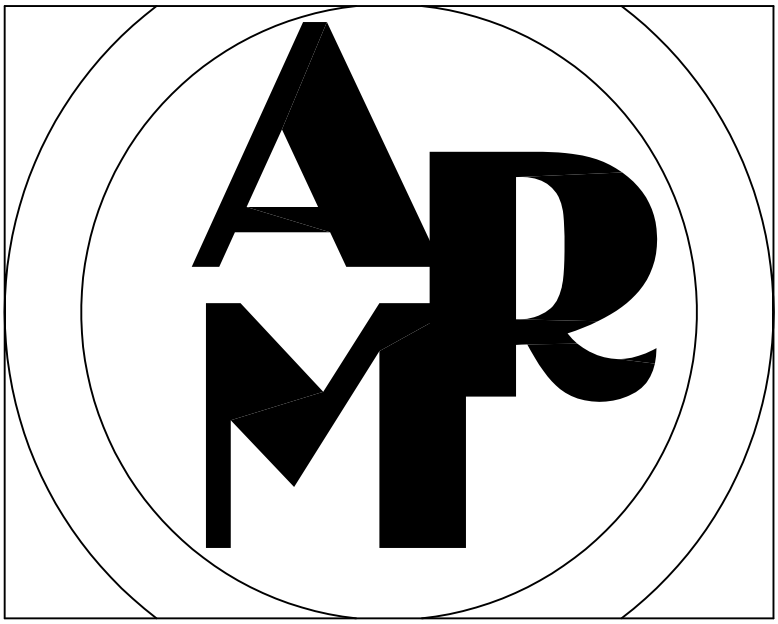

AIR-RITE MANUFACTURING, LLC

ROOF CURBS

AIR-RITE MANUFACTURING

SUBMITTAL/FABRICATION DETAIL
MODEL: C-1

CANTED ROOF CURB

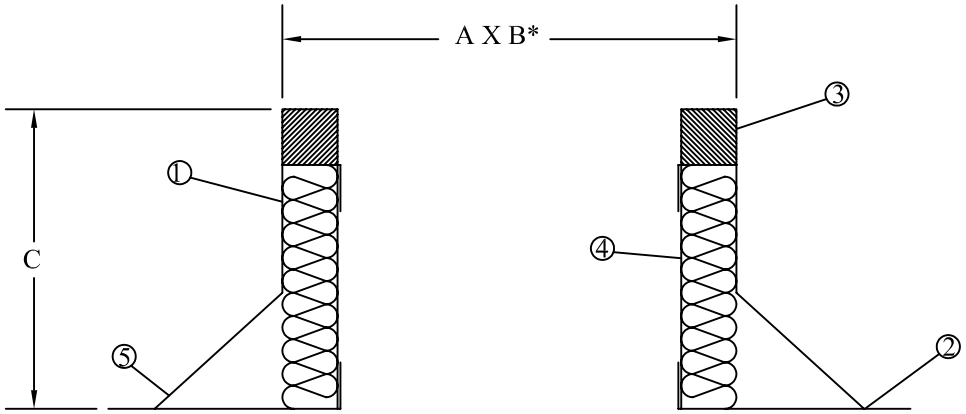

*=OUTSIDE TO OUTSIDE DIMENSION

QTY.	A x B	Height	Pitch	COMMENTS

Standard Construction

① -Curb body made of 18 ga. galvanized sheet metal with welded corners.
② -Base plate is 22 ga. galvanized sheet metal which is tack welded to the curb shell.
③ -1 1/2" X 1 1/2" wood nailer.
④ -1 1/2" fiberglass insulation
⑤ -3" X 3" cant strip

Optional Construction

☐-Rectangular curb.
☐-.063 Aluminum construction.
☐-Burglar bars.
☐-Foam mounting gasket.
☐-Damper tray.
☐-Non-standard height (Specify height when ordering).
☐-Pressure treated nailers.
☐-Pitched curbs (Specify pitch when ordering).

Union "Blue Label" Made.

PROJECT NAME:

W/O #:

TAG #:

CONTRACTOR:

SUBMITTED BY:

PAGE: C-1

AIR-RITE MFG. RESERVES THE RIGHT TO CHANGE SPECIFICATIONS WITHOUT NOTICE.

AIR-RITE MANUFACTURING

SUBMITTAL/FABRICATION DETAIL
MODEL: C-2

SELF FLASHING ROOF CURB

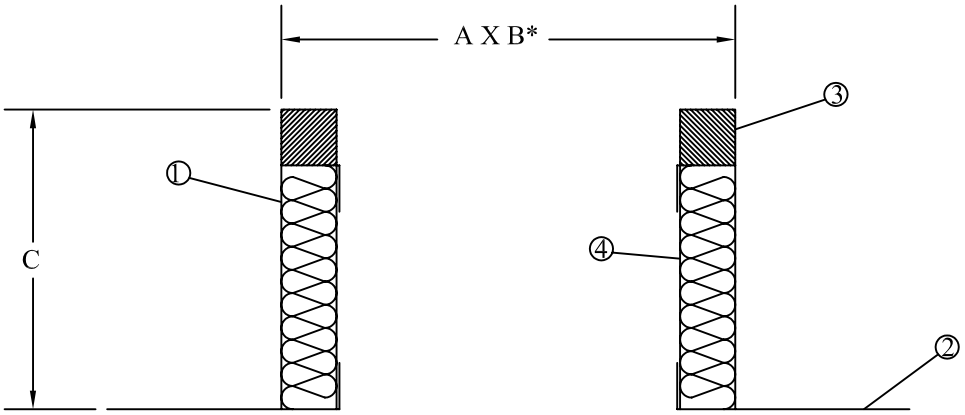

*=OUTSIDE TO OUTSIDE DIMENSION

QTY.	A x B	Height	Pitch	COMMENTS

Standard Construction

①-Curb body made of 18 ga. galvanized sheet metal with welded corners.
②-Base plate is 22 ga. galvanized sheet metal which is tack welded to the curb shell.
③-1 1/2" X 1 1/2" wood nailer.
④-1 1/2" fiberglass insulation

Optional Construction

☐-Rectangular curb.
☐-.081 Aluminum construction.
☐-Burglar bars.
☐-Foam mounting gasket.
☐-Damper tray.
☐-Non-standard height (Specify height when ordering).
☐-Pressure treated nailers.
☐-Pitched curbs (Specify pitch when ordering).

Union "Blue Label" Made.

PROJECT NAME:
W/O #:
TAG #:
CONTRACTOR:
SUBMITTED BY:

AIR-RITE MFG. RESERVES THE RIGHT TO CHANGE SPECIFICATIONS WITHOUT NOTICE.

AIR-RITE MANUFACTURING

SUBMITTAL/FABRICATION DETAIL
MODEL: C-2P

SELF FLASHING ROOF EQUIPMENT PLATFORM

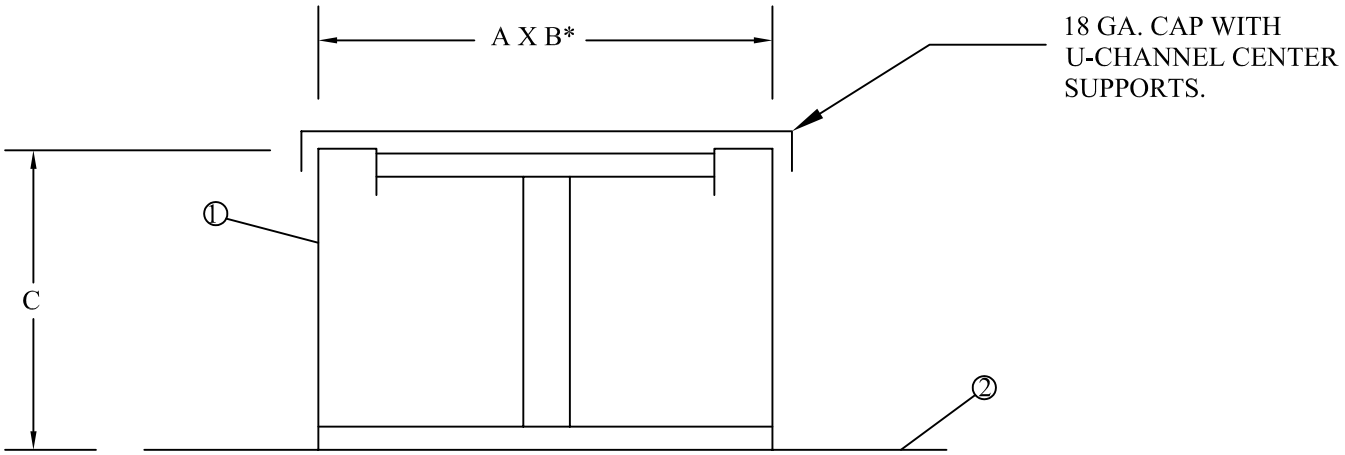

*=OUTSIDE TO OUTSIDE DIMENSION

Count	A x B	Height

Standard Construction

①-Curb body made of 14 ga. galvanized sheet metal with welded corners.
②-Base plate is 22 ga. galvanized sheet metal which is tack welded to the curb shell.
③-NO wood nailer.
④-NO fiberglass insulation

Optional Construction

☐-Rectangular curb.
☐-.063 Aluminum construction.
☐-Burglar bars.
☐-Foam mounting gasket.
☐-Damper tray.
☐-Non-standard height (Specify height when ordering).
☐-Pressure treated nailers.
☐-Pitched curbs (Specify pitch when ordering).

Union "Blue Label" Made.

PROJECT NAME:	
W/O #:	
TAG #:	
CONTRACTOR:	
SUBMITTED BY:	

AIR-RITE MFG. RESERVES THE RIGHT TO CHANGE SPECIFICATIONS WITHOUT NOTICE.

AIR-RITE MANUFACTURING

SUBMITTAL/FABRICATION DETAIL
MODEL: CANTED (C-2R) RAIL

EQUIPMENT
RAIL

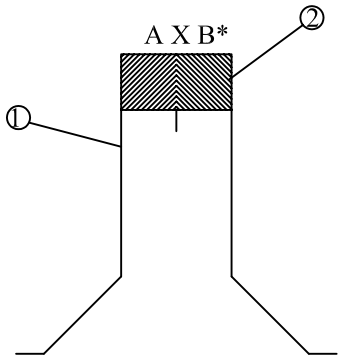

Count	A x B	Height

Standard Construction

①-Curb body made of 18 ga. galvanized sheet metal with welded corners.
②-2"x 4" wood nailer.

Optional Construction

☐-Rectangular curb.
☐-.063 Aluminum construction.
☐-Burglar bars.
☐-Foam mounting gasket.
☐-Damper tray.
☐-Non-standard height (Specify height when ordering).
☐-Pressure treated nailers.
☐-Pitched curbs (Specify pitch when ordering).

Union "Blue Label" Made.

PROJECT NAME:
ENGINEER:
TAG #:
CONTRACTOR:
SUBMITTED BY:

AIR-RITE MFG. RESERVES THE RIGHT TO CHANGE SPECIFICATIONS WITHOUT NOTICE.

AIR-RITE MANUFACTURING

SUBMITTAL/FABRICATION DETAIL
MODEL: C-3

CANTED STEP CURB

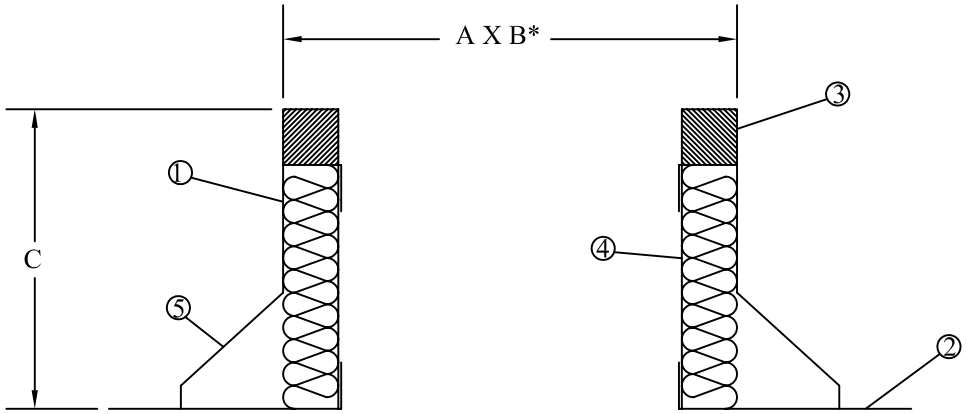

*=OUTSIDE TO OUTSIDE DIMENSION

Count	A x B	Height

Standard Construction

①-Curb body made of 18 ga. galvanized sheet metal with welded corners.
②-Base plate is 22 ga. galvanized sheet metal which is tack welded to the curb shell.
③-1 1/2" X 1 1/2" wood nailer.
④-1 1/2" fiberglass insulation.
⑤-3" X 3" cant strip with 1 1/2" step.

Optional Construction

☐-Rectangular curb.
☐-.063 Aluminum construction.
☐-Burglar bars.
☐-Foam mounting gasket.
☐-Damper tray.
☐-Non-standard height (Specify height when ordering).
☐-Pressure treated nailers.
☐-Pitched curbs (Specify pitch when ordering).

Union "Blue Label" Made.

PROJECT NAME:	
ENGINEER:	
TAG #:	
CONTRACTOR:	
SUBMITTED BY:	

PAGE: C-3

AIR-RITE MFG. RESERVES THE RIGHT TO CHANGE SPECIFICATIONS WITHOUT NOTICE.

AIR–RITE MANUFACTURING

SUBMITTAL/FABRICATION DETAIL
MODEL: C-2A

SELF FLASHING ROOF CURB
No Nailer

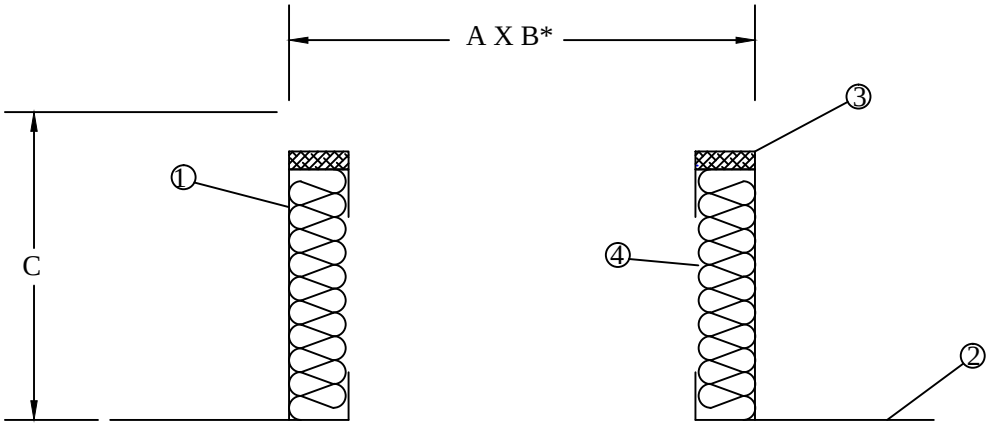

*=OUTSIDE TO OUTSIDE DIMENSION

QTY.	A x B	Height	Pitch	

Standard Construction

①-Curb body made of 18 ga. galvanized sheet metal with welded corners.
②-Base plate is 22 ga. galvanized sheet metal which is tack welded to the curb shell.
③-1 1/2" x 1/4" Foam Mounting Gasket
④-1 1/2" fiberglass insulation

Optional Construction

☐-Rectangular curb.
☐-.081 Aluminum construction.
☐-Burglar bars.
☐-Damper tray.
☐-Non-standard height (Specify height when ordering).
☐-Pressure treated nailers.
☐-Pitched curbs (Specify pitch when ordering).

Union "Blue Label" Made.

PROJECT NAME:	
W/O #:	
TAG #:	
CONTRACTOR:	
SUBMITTED BY:	

AIR-RITE MFG. RESERVES THE RIGHT TO CHANGE SPECIFICATIONS WITHOUT NOTICE.

AIR–RITE MANUFACTURING

C-2A

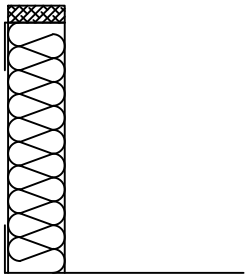

C-2

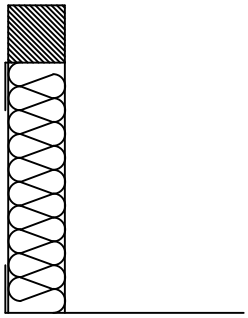

C-1

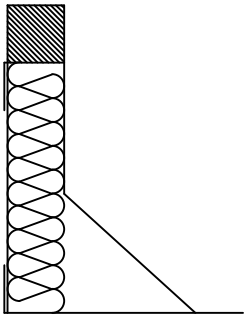

C-3

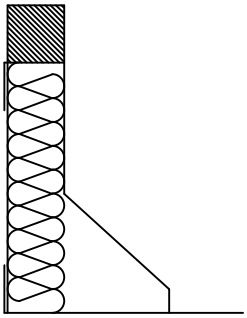

CURB SIZE (SQUARE)	C-2A	C-2	C-1	C-3
10	112.00	120.00	128.00	136.00
12	112.00	120.00	128.00	136.00
14	116.00	124.00	132.00	140.00
16	116.00	124.00	132.00	200.00
18	146.00	154.00	162.00	200.00
20	150.00	158.00	166.00	204.00
22	150.00	158.00	166.00	208.00
24	168.00	176.00	184.00	216.00
26	180.00	188.00	196.00	220.00
28	190.00	198.00	206.00	232.00
32	210.00	220.00	228.00	248.00
34	210.00	220.00	228.00	248.00
36	214.00	224.00	232.00	256.00
38	218.00	228.00	232.00	256.00
40	238.00	248.00	256.00	268.00
42	242.00	252.00	260.00	276.00
44	262.00	272.00	280.00	296.00
46	262.00	272.00	280.00	320.00
48	286.00	296.00	304.00	320.00
50	298.00	308.00	316.00	336.00
52	310.00	320.00	328.00	348.00
54	326.00	336.00	344.00	360.00
56	336.00	346.00	354.00	376.00
58	350.00	360.00	368.00	392.00
60	370.00	380.00	388.00	404.00

CURB OPTIONAL CONSTRUCTION PRICING

ADD FOR 16 GA. GALV. CONSTRUCTION: 37%

ADD FOR DAMPER TRAY: 12%

ADD FOR .063 ALUM. CONSTRUCTION: 40%

ADD FOR NON-STANDARD HEIGHTS:

12" HIGH	10%
14" HIGH	20%
16" HIGH	30%
20" HIGH	50%
24" HIGH	60%
HIGHER THAN 24"	CONSULT FACTORY

ADD FOR METAL LINER: CONSULT FACTORY

ADD FOR PITCHED CURBS:

0" THRU 2" IN 12"	35%
3" THRU 4" IN 12"	50%
5" THRU 6" IN 12"	75%
OVER 6" IN 12"	CONSULT FACTORY

ADD FOR DOUBLE PITCHED CURBS: CONSULT FACTORY

ADD FOR BURGLAR BARS: $24.00 SQ. FT.

ADD FOR CURBS WITH (1) SIDE OVER 120": 12%

ADD FOR FOAM MOUNTING GASKET: 8%

CURB EXTENSIONS MODEL (4V ONLY) SAME AS 4V

AIR-RITE MFG. RESERVES THE RIGHT TO CHANGE SPECIFICATIONS WITHOUT NOTICE.

AIR–RITE MANUFACTURING

SUBMITTAL/FABRICATION DETAIL
MODEL: C-2PLDS

SELF FLASHING ROOF EQUIPMENT PLATFORM-LDS

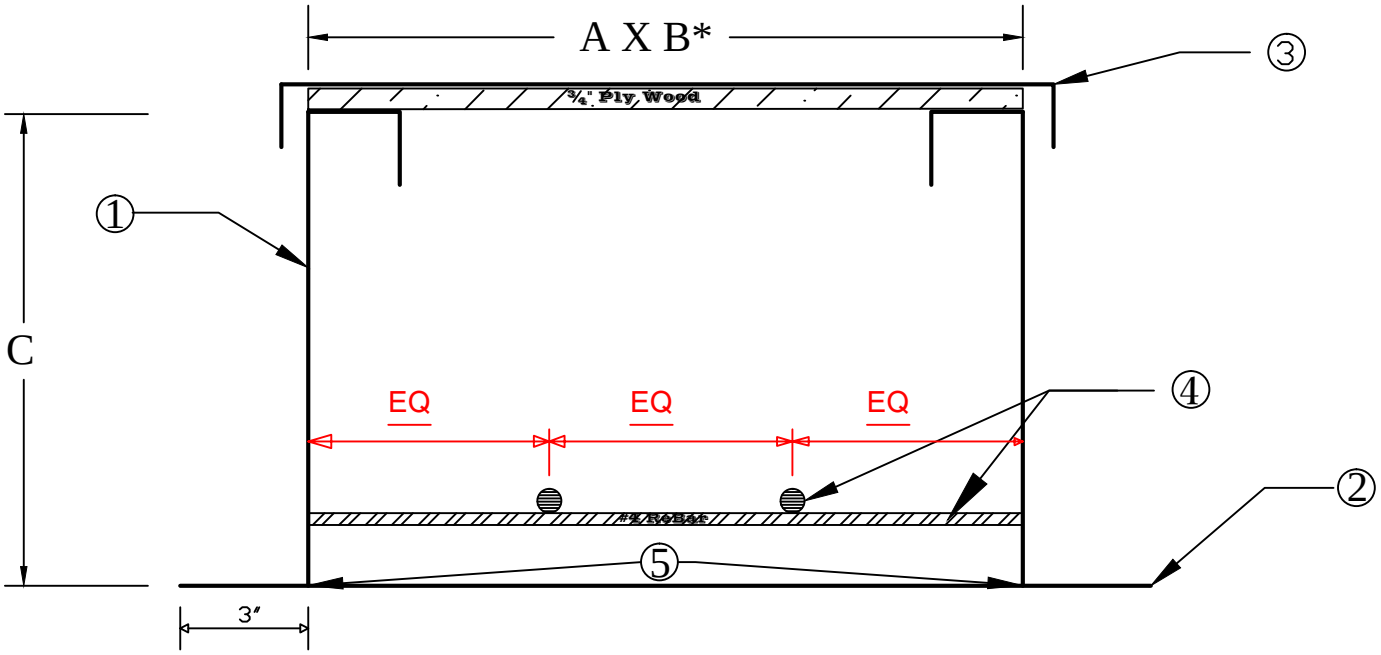

*=OUTSIDE TO OUTSIDE DIMENSION

Count	A x B	Height

Standard Construction

①-Curb body made of 18 ga. galvanized sheet metal with welded corners.

②-Solid Bottom 20ga. galvanized sheet metal which is tack welded to the curb shell.

③ - Removable 18ga cap with ¾" plywood made 1" larger than A&B dimensions to allow for roofing material

④ - #4 Deformed Rebar equally spaced and welded 2" up from base and at cross points 2 pcs. running each direction

⑤ -Water Tight Seal #370 Professional Grade Silicone along inside perimeter edge

Optional Construction

☐ -Rectangular curb.

☐ -.063 Aluminum construction.

☐ -Non-standard height (Specify height when ordering).

☐ -Pitched curbs (Specify pitch when ordering).

Union "Blue Label" Made.

PROJECT NAME:	
W/O #:	
TAG #:	
CONTRACTOR:	
SUBMITTED BY:	

PAGE: C-2PLDS

AIR-RITE MFG. RESERVES THE RIGHT TO CHANGE SPECIFICATIONS WITHOUT NOTICE.

AIR–RITE MANUFACTURING

SUBMITTAL/FABRICATION DETAIL: VENTED CURB
MODEL: C-4

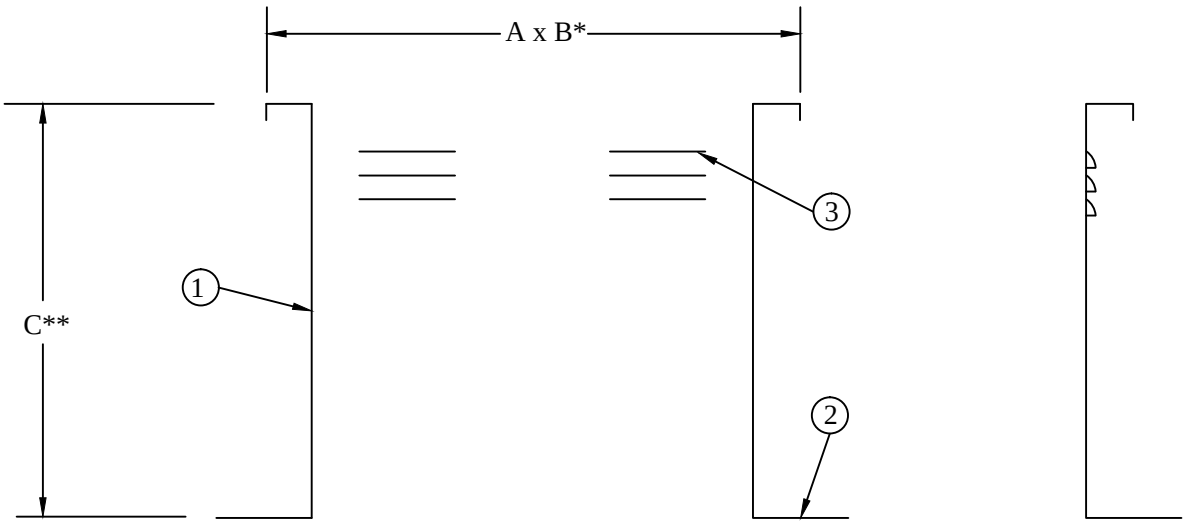

*=OUTSIDE TO OUTSIDE DIMENSION
**=STANDARD HEIGHT IS 16"

Count	A x B	Height (C)

Vents based on O.D. .O6 curb.

-Up to 24" sq. 3
-Up to 34" sq. 4
-Up to 45" sq. 5
-Up to 46" sq. 6

Standard Construction

(1)-Curb body made of 18 Gauge sheet metal with welded corners.
(2)-Base plate is 22 ga. galvanized sheet metal which is tack welded to the curb shell.
(3)- 3" x $\frac{5}{8}$" x $\frac{1}{4}$" slits for ventilation
(4)-Insect screen spot welded over holes.

Optional Construction

☐ -Rectangular curb.
☐ -.063 aluminum construction.
☐ -Burglar bars.
☐ -Foam mounting gasket.
☐ -Damper tray.
☐ -Non-Standard height (specify height when ordering).
☐ -Pressure treated nailers.
☐ -Pitched curbs (specify pitch when ordering.
☐ -Vented curb extension.
☐ -Bug screen behind slots

Union "Blue Label" Made.

PROJECT NAME:	
W/O#:	
TAG #:	
CONTRACTOR:	
SUBMITTED BY:	

PAGE: C-4

AIR-RITE MFG. RESERVES THE RIGHT TO CHANGE SPECIFICATIONS WITHOUT NOTICE.

AIR–RITE MANUFACTURING

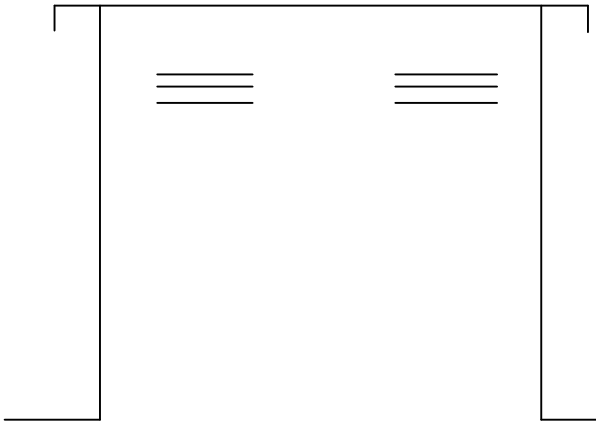

MODEL: C-4

VENTED ROOF CURB

CURB SIZE (SQUARE)	4V
10	144.00
12	144.00
14	152.00
16	168.00
18	168.00
20	172.00
22	188.00
24	212.00
26	228.00
28	248.00
30	268.00
32	280.00
34	300.00
36	316.00
38	336.00
40	352.00
42	368.00
44	388.00
46	404.00
48	424.00
50	444.00
52	464.00
54	480.00
56	496.00
58	516.00
60	536.00

CURB OPTIONAL CONSTRUCTION PRICING

ADD FOR 16 GA. GALV. CONSTRUCTION: 37%

ADD FOR .063 ALUM. CONSTRUCTION: 40%

ADD FOR METAL LINER: CONSULT FACTORY

ADD FOR PITCHED CURBS:

0" THRU 2" IN 12"	35%
3" THRU 4" IN 12"	50%
5" THRU 6" IN 12"	75%
OVER 6" IN 12"	CONSULT FACTORY

ADD FOR DOUBLE PITCHED CURBS: CONSULT FACTORY

ADD FOR CURBS WITH (1) SIDE OVER 120": 12%

ADD FOR FOAM MOUNTING GASKET: 8%

CURB EXTENSIONS MODEL 4V ONLY) SAME AS 4V

AIR-RITE MFG. RESERVES THE RIGHT TO CHANGE SPECIFICATIONS WITHOUT NOTICE.

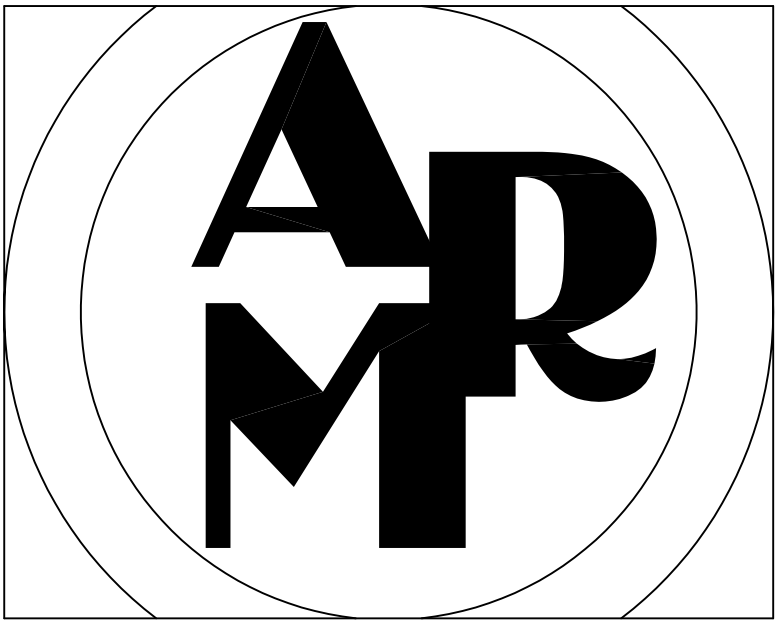

AIR-RITE MANUFACTURING, LLC

CURB ADAPTORS

AIR-RITE MANUFACTURING

SUBMITTAL/FABRICATION DETAIL: CURB ADAPTOR / EXTENSION
MODEL: C-7

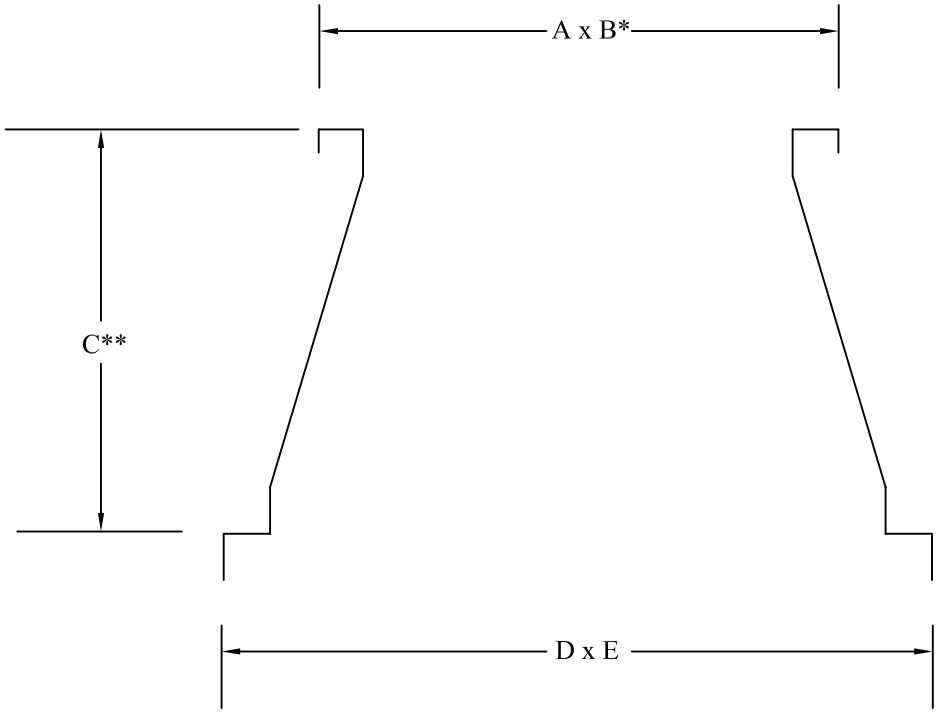

*=OUTSIDE TO OUTSIDE DIMENSION

Count	A x B	D x E	C

Standard Construction

(1)-Curb body made of 18 Gauge sheet metal with welded corners.

Union "Blue Label" Made.

PROJECT NAME:
W/O#:
TAG #:
CONTRACTOR:
SUBMITTED BY:

PAGE: C-7

AIR-RITE MFG. RESERVES THE RIGHT TO CHANGE SPECIFICATIONS WITHOUT NOTICE.

AIR-RITE MANUFACTURING

SUBMITTAL/FABRICATION DETAIL: CURB ADAPTOR / EXTENSION
MODEL: C-8

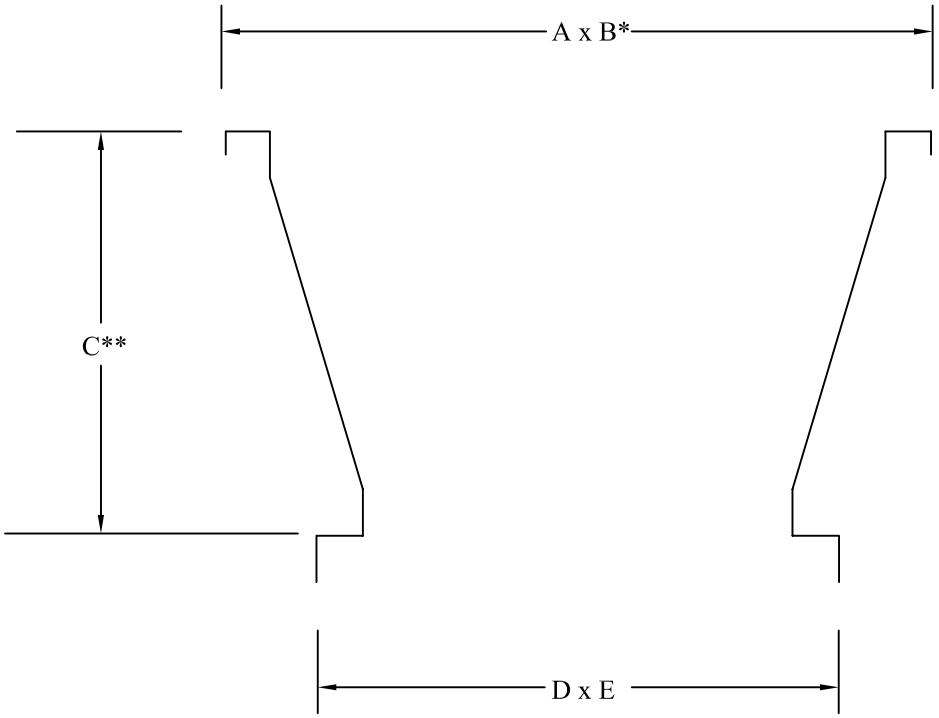

*=OUTSIDE TO OUTSIDE DIMENSION

Count	A x B	D x E	C

Standard Construction

(1)-Curb body made of 18 Gauge sheet metal with welded corners.

Union "Blue Label" Made.

PROJECT NAME:
W/O#:
TAG #:
CONTRACTOR:
SUBMITTED BY:

PAGE: C-8

AIR-RITE MFG. RESERVES THE RIGHT TO CHANGE SPECIFICATIONS WITHOUT NOTICE.

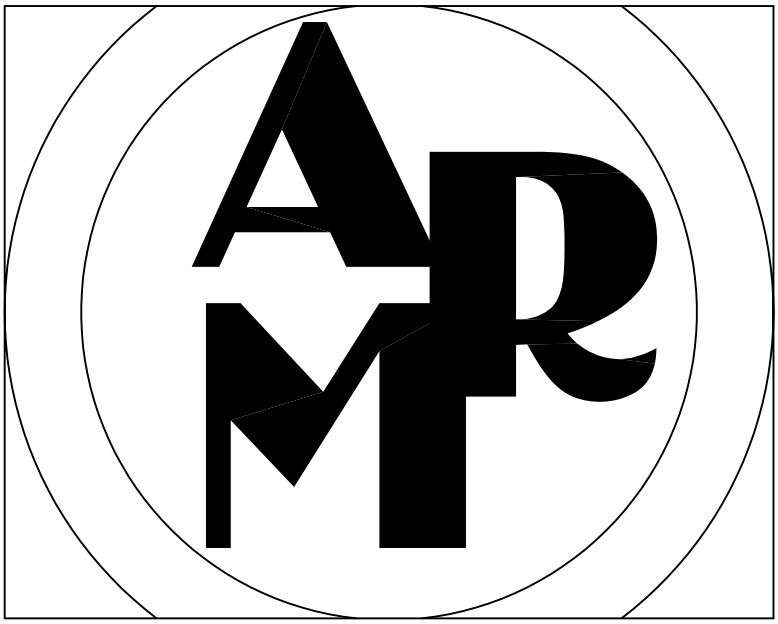

AIR-RITE MANUFACTURING, LLC

MANUAL VOLUME DAMPERS

AIR–RITE MANUFACTURING

SUBMITTAL/FABRICATION DETAIL:
MODEL: CD-1 PARALLEL BLADE DAMPER

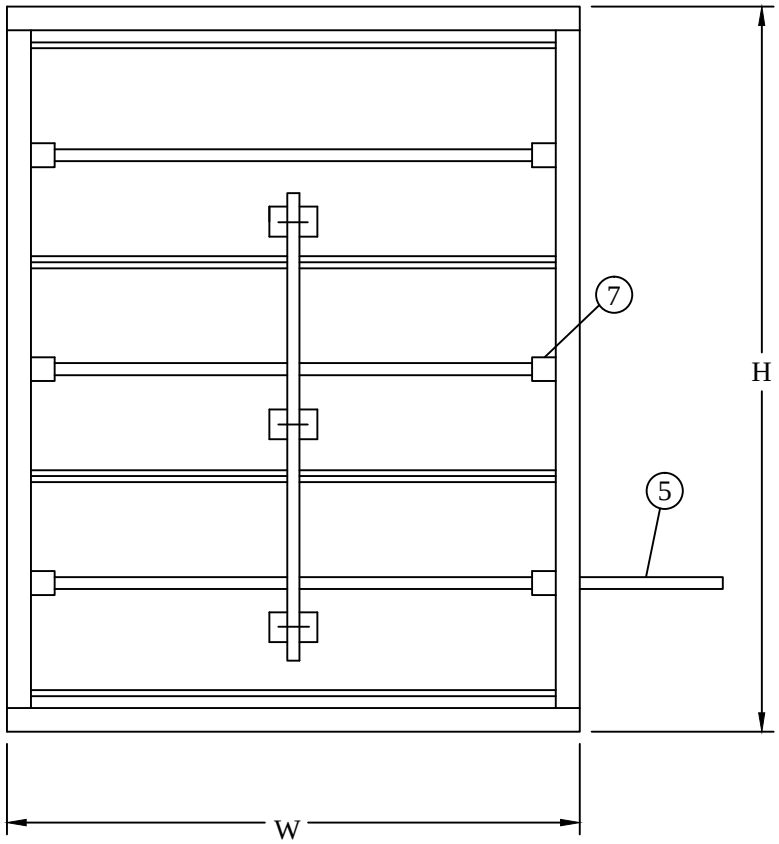

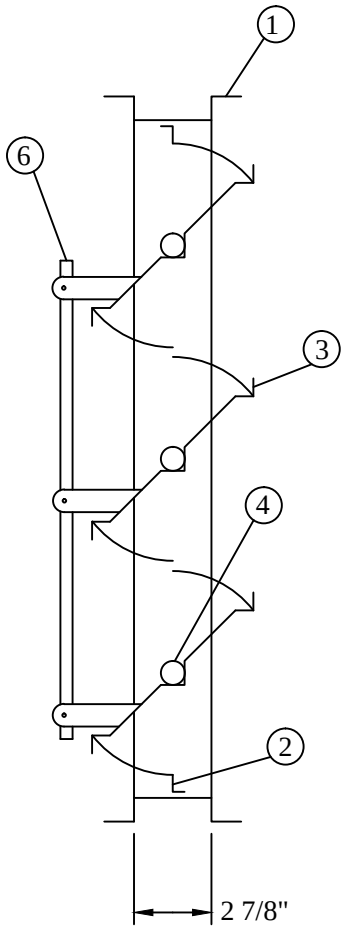

Count	W x H

AMCA TESTED
see data sheets

Union "Blue Label" Made.

Standard Construction

1. -16 ga. hat channel frame.
2. -3/8" angle blade stop.
3. -18 ga. min. blade.
4. -1/2" bronze bushing.
5. -1/2" x 6" drive pin.
6. -14 ga. galvanized steel linkage brackets.
7. -Blade strap/slide pin blade hardware.

Optional Construction

- ☐ -Blade and jam seals.
- ☐ -Quade handle (1/2" or 3/8").
- ☐ -Electric motor.
- ☐ -1/2" nylon bushing.
- ☐ -3/8" x 6" drive pin.
- ☐ -Aluminum Construction

PROJECT NAME:	
W/O #:	
TAG #:	
CONTRACTOR:	
SUBMITTED BY:	

PAGE: CD-1

AIR-RITE MFG. RESERVES THE RIGHT TO CHANGE PECIFICATIONS WITHOUT NOTICE.

AIR-RITE MANUFACTURING

SUBMITTAL/FABRICATION DETAIL:
MODEL: CD-2 OPPOSED BLADE DAMPER

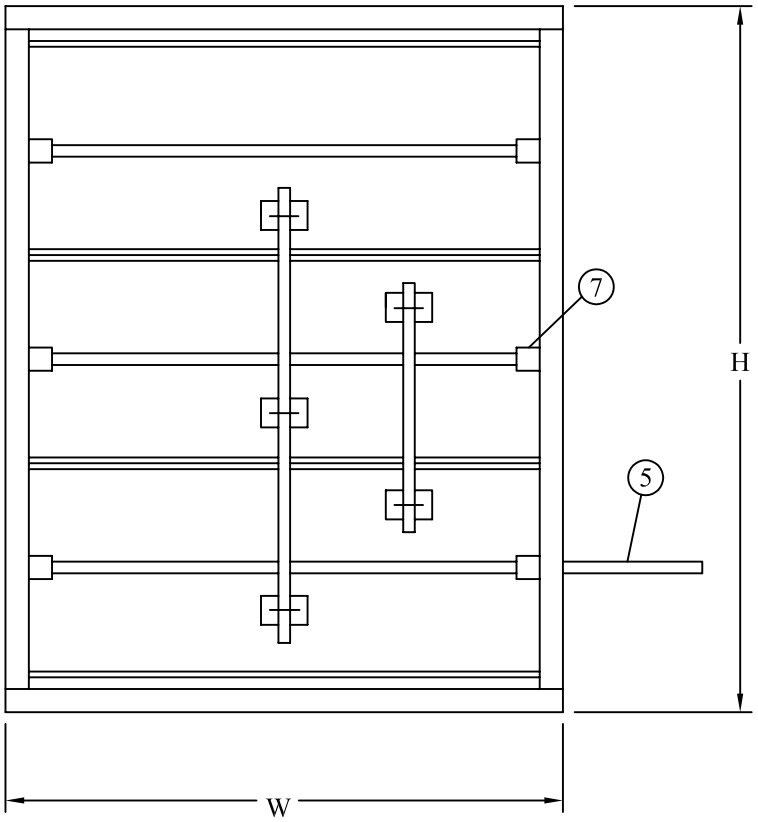

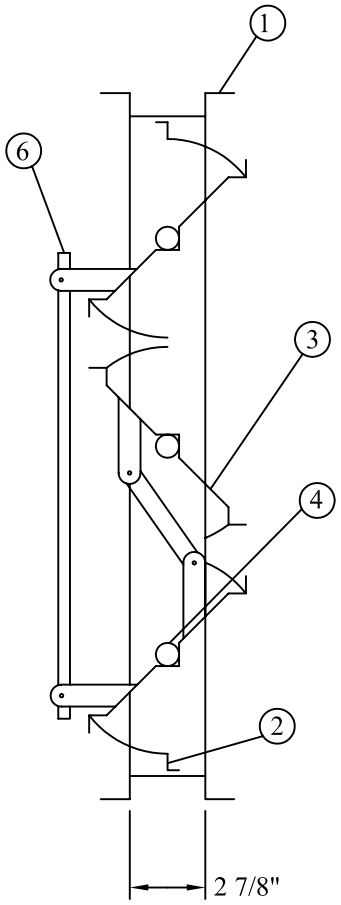

Count	W x H

AMCA TESTED AND CERTIFIED
see data sheets

Standard Construction

1. -16 ga. hat channel frame.
2. -3/8" angle blade stop.
3. -18 ga. min. blade.
4. -1/2" bronze bushing.
5. -3/8" Square x 6" drive pin.
6. -14 ga. galvanized steel linkage brackets.
7. -Blade strap/slide pin blade hardware.

Optional Construction

- ☐ -Blade and jam seals.
- ☐ -Quade handle (1/2" or 3/8").
- ☐ -Electric motor.
- ☐ -1/2" nylon bushing.
- ☐ -3/8" x 6" drive pin.
- ☐ -Aluminum Construction

Union "Blue Label" Made.

PROJECT NAME:	
W/O #:	
TAG #:	
CONTRACTOR:	
SUBMITTED BY:	

PAGE: CD-2

AIR-RITE MFG. RESERVES THE RIGHT TO CHANGE SPECIFICATIONS WITHOUT NOTICE.

AIR-RITE MANUFACTURING

Catalog Date: Jan. 2017

SUBMITTAL DETAIL
MODEL: CD-2 W/BLADE & JAMB SEALS

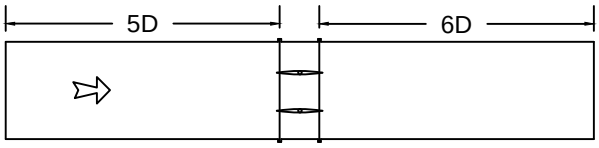

VELOCITY VS. PRESSURE DROP

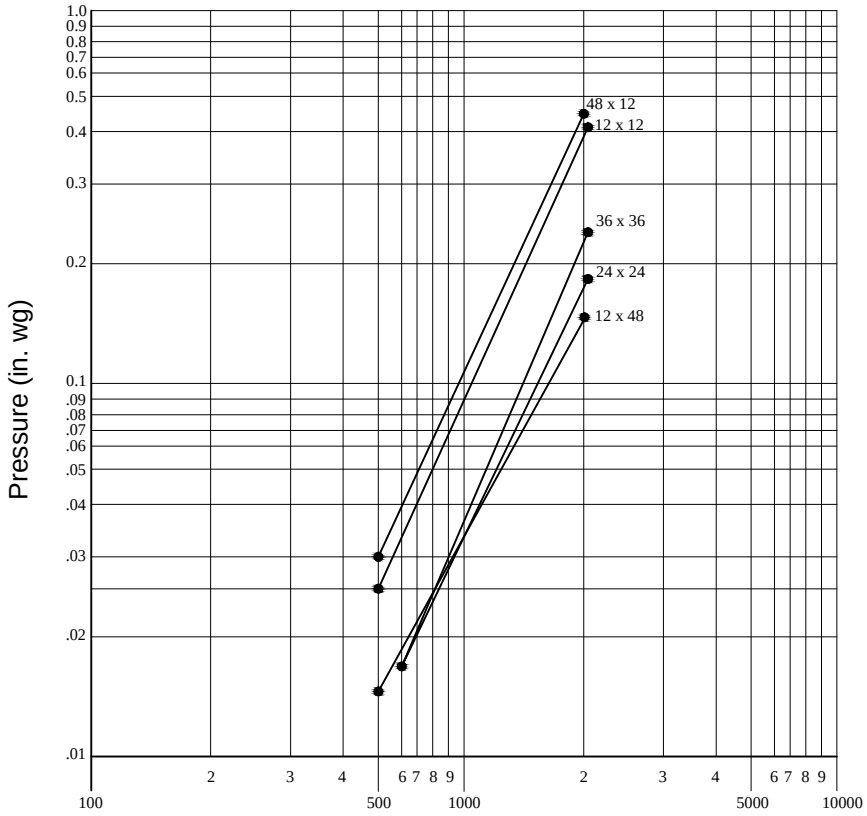

AMCA FIG. 5.3

The ratings shown are based on tests and procedures performed in accordance with AMCA Publication 511 and comply with the requirements of the AMCA testing ratings. Program. Chat applies to Air Performance and Air Leakage.

Actual pressure drop found in any HVAC system is a combination of many factors. This pressure drop information along with an analysis of other system influences should be used to estimate actual pressure losses for a damper installed in a given HVAC system.

12 in. x 12 in.

Velocity (fpm)	Pressure Drop (in. wg)
500	.026 (.005)
800	.010 (.067)
1200	.021 (.150)
1600	.031 (.274)
2000	.052 (.416)

24 in. x 24 in.

Velocity (fpm)	Pressure Drop (in. wg)
500	.015
800	.026
1200	.068
1600	.125
2000	.194

36 in. x 36 in.

Velocity (fpm)	Pressure Drop (in. wg)
500	.015
800	.031
1200	.082
1600	.149
2000	.237

12 in. x 48 in.

Velocity (fpm)	Pressure Drop (in. wg)
500	.015
800	.026
1200	.026
1600	.104
2000	.166

48 in. x 12 in.

Velocity (fpm)	Pressure Drop (in. wg)
500	.03
800	.07
1200	.17
1600	.29
2000	.45

AIR-RITE MANUFACTURING

Catalog Date: Jan. 2017

SUBMITTAL DETAIL
MODEL: CD-2 W/BLADE & JAMB SEALS

Air-Rite Leakage Rating

DAMPER WIDTH	1 in. w.g.	4 in. w.g.
12"	3	3
36"	3	3
48"	3	3

AIR LEAKAGE FLOW RATE

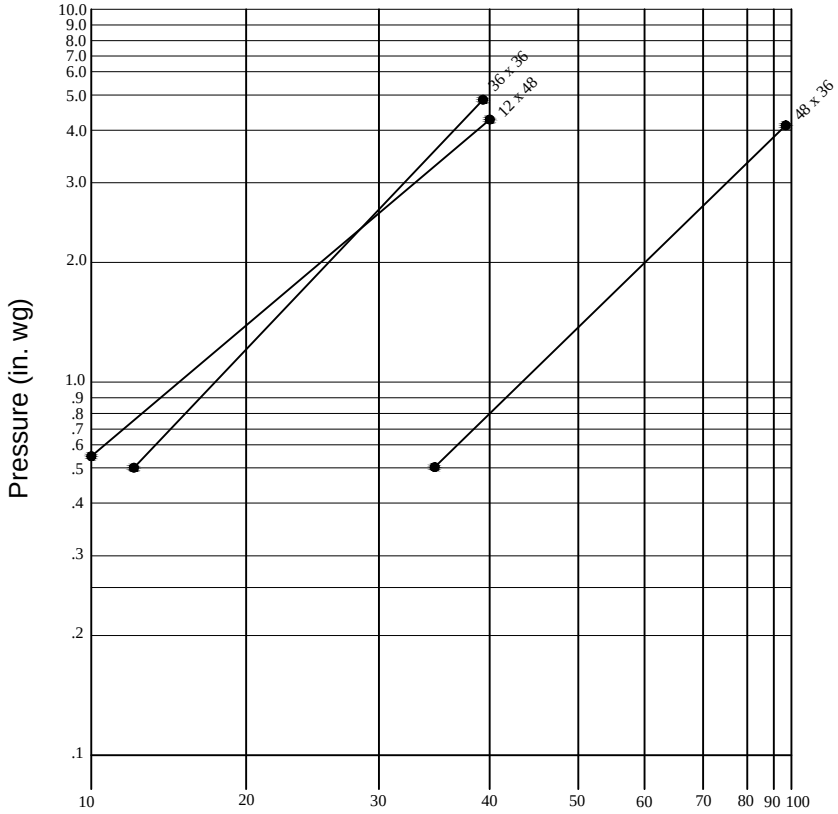

Published air leakage data shall state that air leakage is based on operation between 0°C - 49°C (32°F - 120°F). Data are based on a torque of 35 in-lb/ft^2 (60 in-lb/ft^2 for 36 x 36) applied to close and seat the damper during the test.

Note: Stated torque value shall be the maximum of the samples tested. Any number greater than 0.2 shall be rounded to the next higher number.

Air-Rite Manufacturing, LLC. certifies that the CD-2 shown herein is licensed to bear the AMCA Seal. The ratings shown are based on tests and procedures performed in accordance with AMCA Publication 511 and comply with the requirements of the AMCA Certified Ratings Program. The AMCA International Certified Ratings Seal applies to Air Performance and Air Leakage.

Actual leakage found in any HVAC system is a combination of many factors. This leakage information along with an analysis of other system influences should be used to estimate actual leakage rates for a damper installed in a given HVAC system.

5D

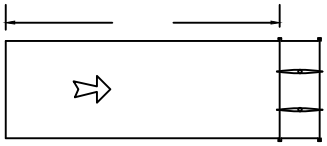

AIR–RITE MANUFACTURING

SUBMITTAL/FABRICATION DETAIL:
MODEL: CD-2A OPPOSED BLADE LOW LEAK DAMPER

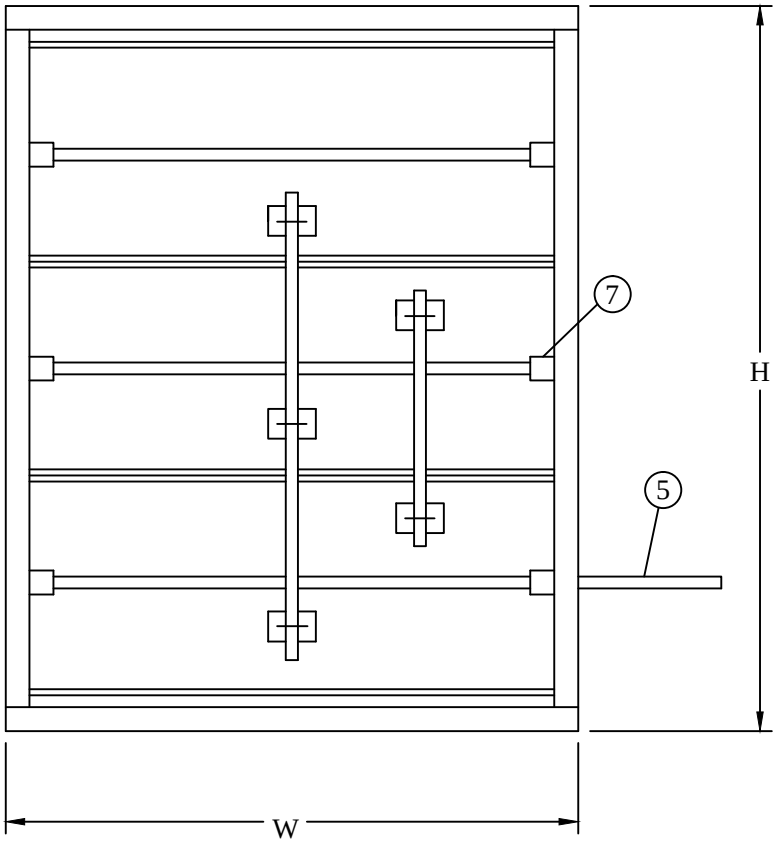

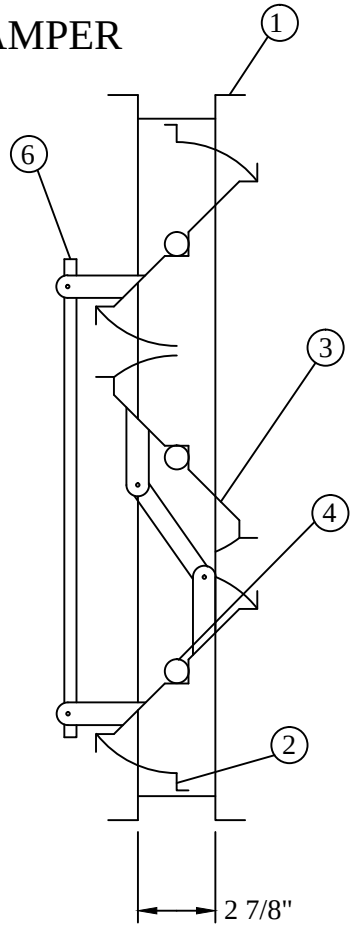

Count	W x H

AMCA TESTED AND CERTIFIED
see data sheets

Standard Construction

1. -16 ga. hat channel frame.
2. -3/8" angle blade stop.
3. -16 ga. min. blade.
4. -1/2" bronze bushing.
5. -3/8" Square x 6" drive pin.
6. -14 ga. galvanized steel linkage brackets.
7. -Blade strap/slide pin blade hardware.

Optional Construction

- ☐ -Quade handle (1/2" or 3/8").
- ☐ -Electric motor.
- ☐ -1/2" nylon bushing.
- ☐ -3/8" x 6" drive pin.
- ☐ -Aluminum Construction

AMCA Tested
see data sheets

Union "Blue Label" Made.

PROJECT NAME:	
W/O #:	
TAG #:	
CONTRACTOR:	
SUBMITTED BY:	

PAGE: CD-2A

AIR-RITE MFG. RESERVES THE RIGHT TO CHANGE SPECIFICATIONS WITHOUT NOTICE.

AIR–RITE MANUFACTURING

MODEL: CD-1 / CD-2

STANDARD DAMPER PRICING

PARALLEL / OPPOSED BLADE DAMPERS

WIDTH

HEIGHT	12	16	20	24	28	32	36	40	44	48
12	80.00	84.00	92.00	94.00	96.00	100.00	104.00	116.00	120.00	128.00
16	96.00	100.00	104.00	108.00	116.00	116.00	124.00	136.00	140.00	152.00
20	120.00	124.00	128.00	130.00	132.00	136.00	144.00	160.00	168.00	176.00
24	132.00	144.00	152.00	152.00	156.00	160.00	164.00	180.00	188.00	200.00
28	144.00	152.00	156.00	156.00	168.00	176.00	184.00	204.00	216.00	224.00
32	156.00	168.00	168.00	176.00	184.00	196.00	196.00	216.00	228.00	244.00
36	176.00	180.00	192.00	192.00	208.00	212.00	220.00	240.00	256.00	272.00
40	188.00	196.00	212.00	212.00	216.00	228.00	236.00	260.00	276.00	296.00
44	196.00	208.00	216.00	216.00	220.00	232.00	240.00	264.00	284.00	320.00
48	212.00	220.00	228.00	232.00	236.00	244.00	256.00	280.00	296.00	336.00

** NOTE: FOR SIZES SMALLER THAN 12" X 12" USE MODEL CD-3 **

ADD FOR ONE (1) PIECE CONSTRUCTION OF DAMPERS OVER 72" WIDE OR TALL: 15%

DAMPER OPTIONAL CONSTRUCTION PRICING

ADD FOR NEOPRENE BLADE AND STAINLESS STEEL JAMB SEALS: 40%

ADD FOR ½" ROUND QUAD. HANDLE: $10.00

ADD FOR ⅜"" SQUARE QUAD. HANDLE: $10.00

ADD FOR ELECTRIC DAMPER ACTUATOR: CONSULT FACTORY

ADD FOR NEOPRENE OR BRASS BUSHINGS: NO CHARGE

ADD FOR ALUMINUM CONSTRUCTION: CONSULT FACTORY

ADD FOR JACK SHAFTING: CONSULT FACTORY

STAND OFF WITH 3/8" QUAD HANDLE: $10.00

AIR-RITE MFG. RESERVES THE RIGHT TO CHANGE SPECIFICATIONS WITHOUT NOTICE.

AIR–RITE MANUFACTURING

SUBMITTAL/FABRICATION DETAIL:
MODEL: CD-3 VOLUME DAMPERS-SINGLE BLADE TYPE

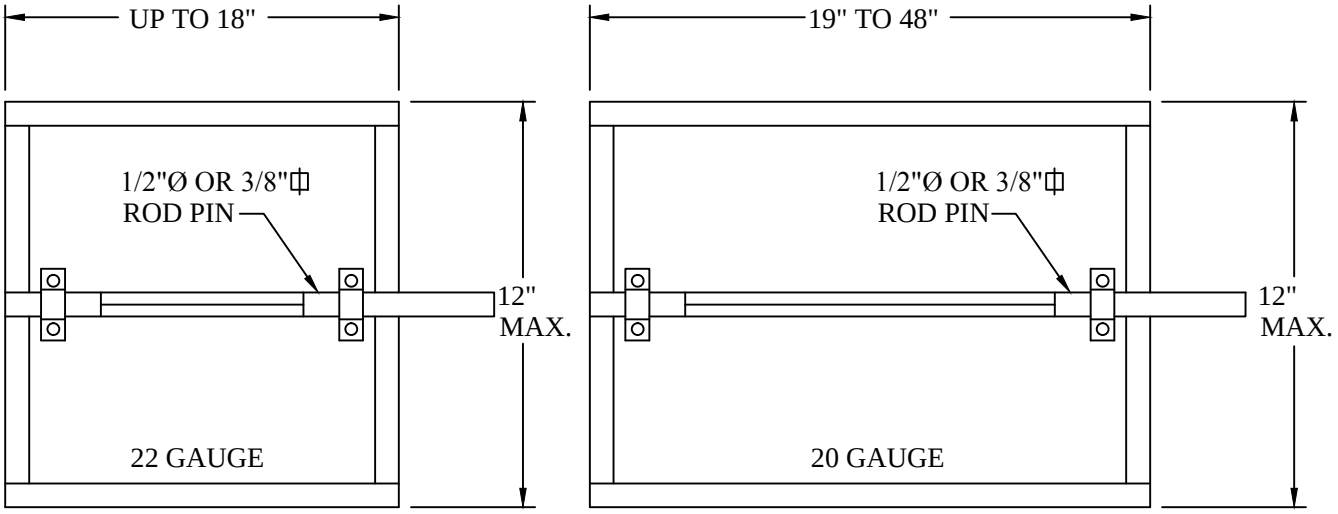

1/8" CLEARANCE ALL AROUND

Count	W x H

Count	W x H

Standard Construction

- -18 ga. galvanized steel frame.
- -22 ga. galvanized steel blade (up to 18").
- -20 ga. galvanized steel blade (19" to 48").
- -1/2" x 6" drive pin.
- -1/2" bronze bushing.
- -18 ga. blade stop.

Optional Construction

- ☐ -Blade and jam seals.
- ☐ -Quade handle (1/2" or 3/8").
- ☐ -Electric motor.
- ☐ -1/2" nylon bushing.
- ☐ -3/8" x 6" drive pin.

Union "Blue Label" Made.

PROJECT NAME:
W/O #:
TAG #:
CONTRACTOR:
SUBMITTED BY:

AIR-RITE MFG. RESERVES THE RIGHT TO CHANGE SPECIFICATIONS WITHOUT NOTICE.

AIR–RITE MANUFACTURING

MODEL: CD-3

STANDARD DAMPER PRICING

SINGLE BLADE DAMPERS

WIDTH

HEIGHT	8	10	12	14	16	18	20	22	24	26	28	30
6	76.00	80.00	84.00	88.00	92.00	96.00	104.00	112.00	120.00	124.00	136.00	140.00
8	80.00	80.00	84.00	92.00	96.00	100.00	112.00	120.00	128.00	132.00	144.00	148.00
10	80.00	84.00	88.00	96.00	100.00	104.00	120.00	128.00	136.00	144.00	152.00	160.00
12	84.00	84.00	92.00	100.00	112.00	116.00	128.00	136.00	144.00	148.00	156.00	168.00
14	84.00	92.00	100.00	112.00	120.00	124.00	136.00	144.00	152.00	156.00	168.00	176.00
16	92.00	100.00	112.00	120.00	124.00	132.00	144.00	152.00	160.00	164.00	172.00	184.00
18	100.00	112.00	120.00	124.00	136.00	144.00	152.00	160.00	168.00	176.00	184.00	192.00
20	112.00	120.00	124.00	132.00	140.00	148.00	160.00	168.00	172.00	184.00	192.00	196.00

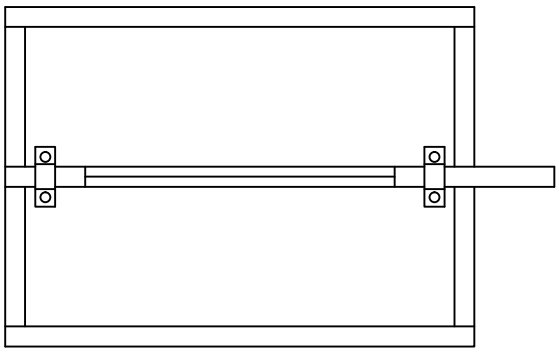

DAMPER OPTIONAL CONSTRUCTION PRICING

ADD FOR NEOPRENE BLADE AND STAINLESS STEEL JAMB SEALS: 40%

ADD FOR ½" ROUND QUAD. HANDLE: $10.00

ADD FOR ⅜"" SQUARE QUAD. HANDLE: $10.00

ADD FOR ELECTRIC DAMPER ACTUATOR: CONSULT FACTORY

ADD FOR NEOPRENE OR BRASS BUSHINGS: NO CHARGE

ADD FOR ALUMINUM CONSTRUCTION: CONSULT FACTORY

ADD FOR JACK SHAFTING: CONSULT FACTORY

ADD STAND OFF WITH ⅜ " QUAD HANDLE: $10.00

AIR-RITE MFG. RESERVES THE RIGHT TO CHANGE SPECIFICATIONS WITHOUT NOTICE.

AIR-RITE MANUFACTURING

SUBMITTAL/FABRICATION DETAIL:
MODEL: CD-4 VOLUME DAMPERS-SINGLE BLADE TYPE LIGHT GUAGE

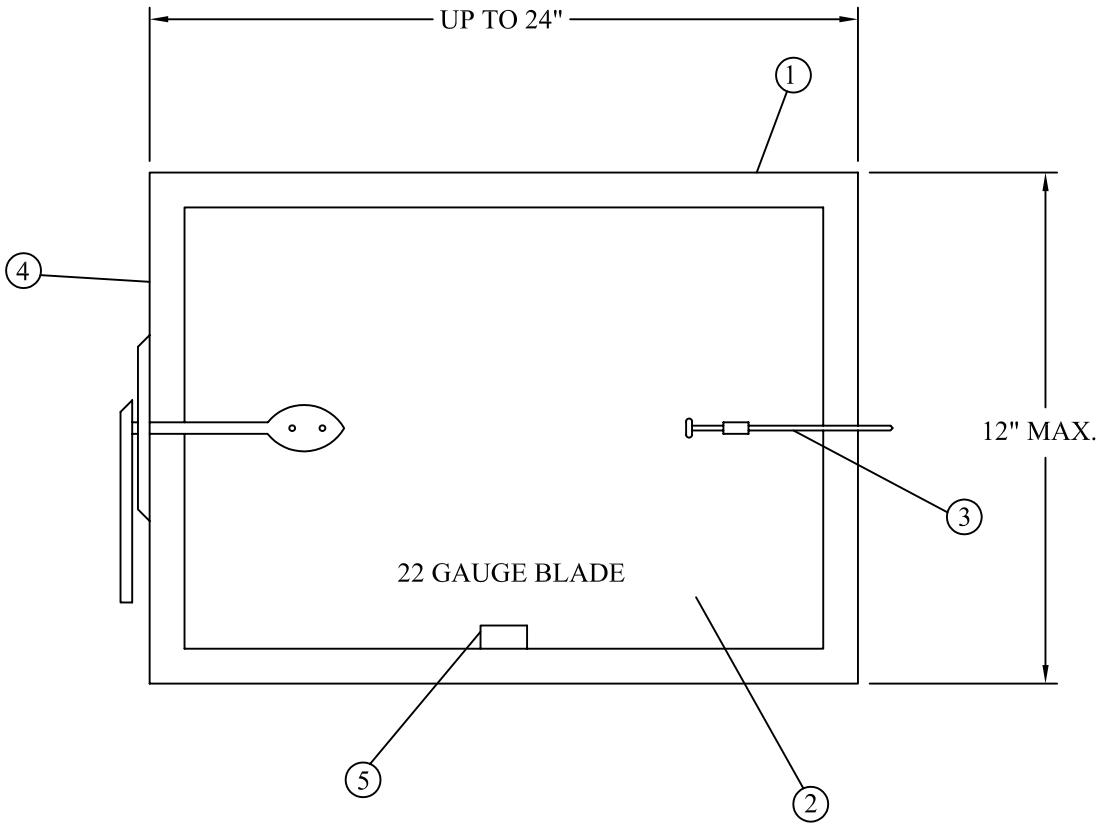

Count	W x H

Standard Construction

(1)-3" thick 20 ga. galvanized steel frame.

(2)-22 ga. galvanized steel blade.

(3)-1/4" retractable bearings.

(4)-1/4" quadrant handle.

(5)-20 ga. blade stop.

Union "Blue Label" Made.

PROJECT NAME:
W/O #:
TAG #:
CONTRACTOR:
SUBMITTED BY:

PAGE: CD-4

AIR-RITE MFG. RESERVES THE RIGHT TO CHANGE SPECIFICATIONS WITHOUT NOTICE.

AIR-RITE MANUFACTURING

MODEL: CD-4

STANDARD DAMPER PRICING

SINGLE BLADE DAMPERS (LIGHT GUAGE)

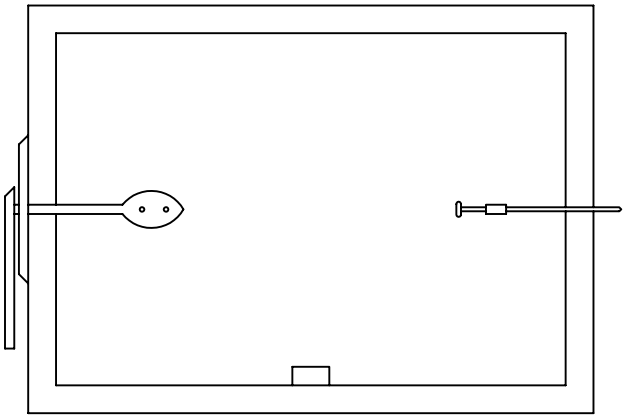

DAMPER OPTIONAL CONSTRUCTION PRICING

ALUMINUM CONSTRUCTION.....ADD 40%

WIDTH

HEIGHT	8	10	12	14	16	18	20	22	24	26	28	30
6	40.00	44.00	44.00	44.00	48.00	52.00	56.00	60.00	64.00	68.00	68.00	76.00
8	44.00	44.00	44.00	48.00	52.00	56.00	60.00	64.00	68.00	72.00	72.00	76.00
10	44.00	48.00	48.00	52.00	56.00	60.00	64.00	68.00	72.00	72.00	72.00	80.00
12	46.00	52.00	52.00	56.00	60.00	64.00	68.00	72.00	76.00	76.00	76.00	84.00
14	50.00	52.00	60.00	60.00	64.00	68.00	72.00	72.00	76.00	80.00	80.00	88.00
16	52.00	60.00	60.00	64.00	68.00	68.00	72.00	76.00	80.00	84.00	84.00	92.00
18	60.00	60.00	64.00	68.00	68.00	72.00	76.00	80.00	84.00	88.00	88.00	96.00
20	60.00	64.00	68.00	72.00	72.00	76.00	80.00	84.00	88.00	92.00	92.00	100.00

AIR-RITE MFG. RESERVES THE RIGHT TO CHANGE
SPECIFICATIONS WITHOUT NOTICE.

AIR-RITE MANUFACTURING

SUBMITTAL/FABRICATION DETAIL:
MODEL: CD-5 SINGLE BLADE ROUND DAMPER

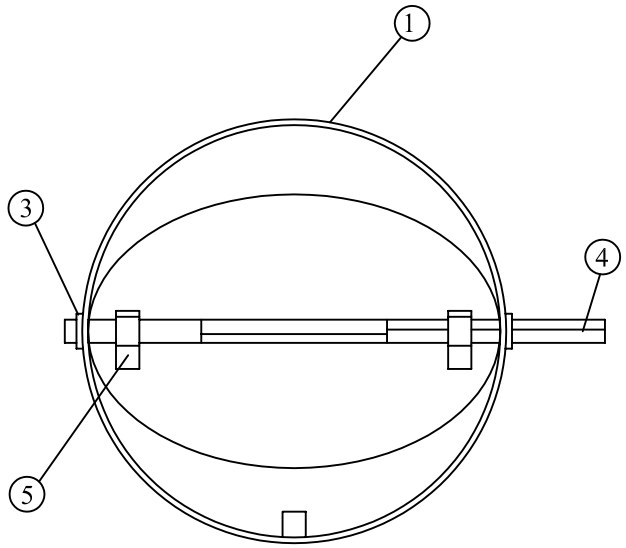

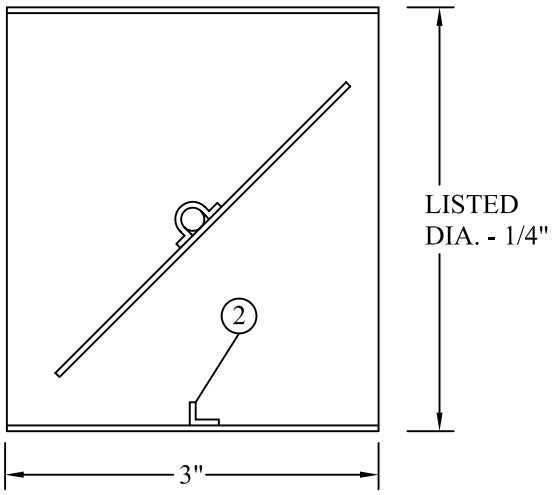

Count	Size

Standard Construction

(1) -18 ga. galvanized steel frame.

(2) -3/8" angle blade stop.

(3) -1/2" bronze bushing.

(4) -3/8" x 5.5" drive pin.

(5) -Blade straps/slide pin.

Optional Construction

☐ -Blade and jam seals.
☐ -Quadrant Handle (1/2" or 3/8").
☐ -Electric motor.
☐ -1/2" nylon bushing.
☐ -1/2" x 6" drive pin.

Union "Blue Label" Made.

PROJECT NAME:
W/O #:
TAG #:
CONTRACTOR:
SUBMITTED BY:

PAGE: CD-5

AIR-RITE MFG. RESERVES THE RIGHT TO CHANGE SPECIFICATIONS WITHOUT NOTICE.

AIR-RITE MANUFACTURING

SUBMITTAL/FABRICATION DETAIL:
MODEL: CD-5A SINGLE BLADE ROUND DAMPER
(W/CONTINUOUS 3/8" SHAFT.)

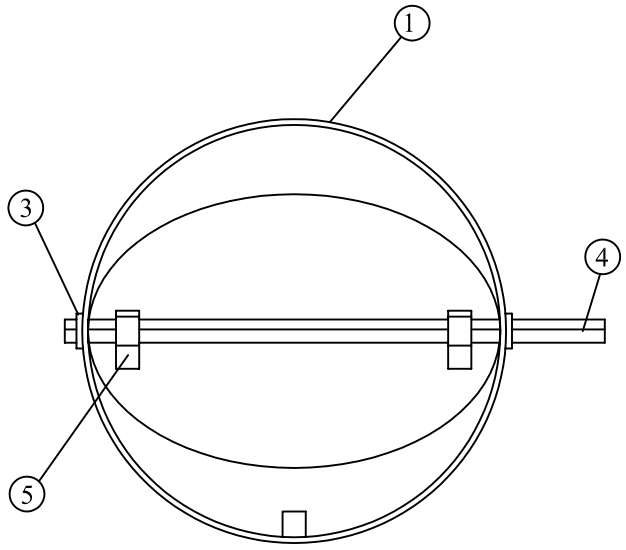

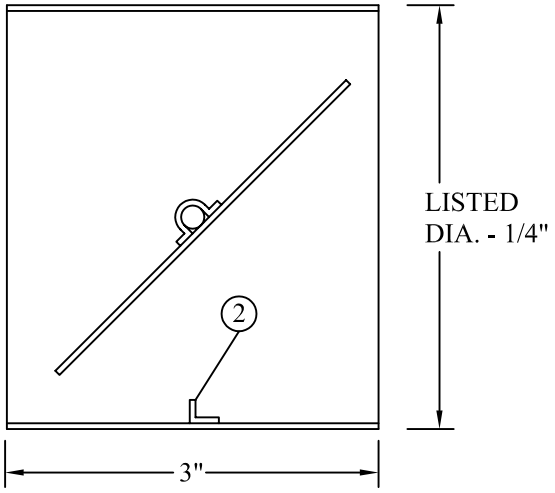

Count	Size

Standard Construction

(1) -18 ga. galvanized steel frame.
16 ga. galvanized steel blade.
(2) -3/8" angle blade stop.
(3) -1/2" bronze bushing.
(4) -3/8" Continuous Drive Shaft.
(5) -Blade straps/slide pin.

Optional Construction

☐ -Blade and jam seals.
☐ -Quadrant Handle (1/2" or 3/8").
☐ -Electric motor.
☐ -1/2" nylon bushing.
☐ -1/2" x 6" drive pin.

Union "Blue Label" Made.

PROJECT NAME:	
W/O #:	
TAG #:	
CONTRACTOR:	
SUBMITTED BY:	

PAGE: CD-5A

AIR-RITE MFG. RESERVES THE RIGHT TO CHANGE SPECIFICATIONS WITHOUT NOTICE.

AIR–RITE MANUFACTURING

MODEL: CD-5, CD-5A

STANDARD DAMPER PRICING

SINGLE BLADE ROUND DAMPERS

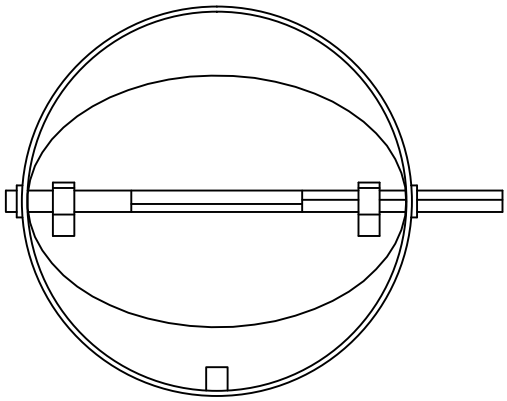

4"Ø THRU 5"Ø	43.00
6"Ø THRU 10"Ø	48.50
11"Ø THRU 12"Ø	55.50
13"Ø THRU 14"Ø	64.50
15"Ø THRU 16"Ø	73.50
17"Ø THRU 19"Ø	79.00
20"Ø THRU 22"Ø	82.50
23"Ø THRU 24"Ø	88.00
25"Ø THRU 26"Ø	93.50

DAMPER OPTIONAL CONSTRUCTION PRICING

FOR CD-5A CONSTRUCTION ADD: 15%
ADD FOR BLADE SEALS: 40%
ADD FOR ½" ROUND QUAD. HANDLE: $10.00
ADD FOR ⅜"" SQUARE QUAD. HANDLE: $10.00
ADD FOR ELECTRIC DAMPER ACTUATOR: CONSULT FACTORY
ADD FOR NEOPRENE OR BRASS BUSHINGS: NO CHARGE
ADD FOR ALUMINUM CONSTRUCTION: 35%
ADD FOR OPPOSED / PARALLEL BLADES: CONSULT FACTORY

AIR-RITE MFG. RESERVES THE RIGHT TO CHANGE SPECIFICATIONS WITHOUT NOTICE.

AIR-RITE MANUFACTURING

SUBMITTAL/FABRICATION DETAIL
MODEL: CD-5OB ROUND OPPOSED BLADE VOLUME DAMPER

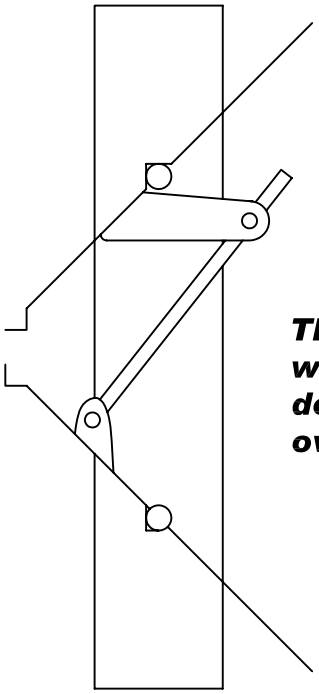

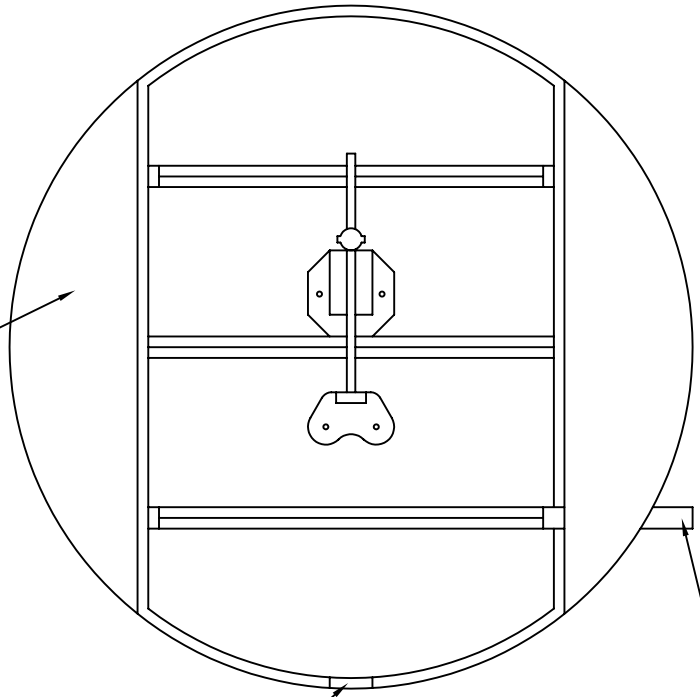

This closed area will vary in size depending on overall damper size

Blade stop

Extended shaft 6" long for control operation

Count	W x L	Dia.

Note: Damper will be built ¼" undersized.

Minimum size: 12"Ø
Maximum size: 48"Ø

Standard Construction

- *-Frame is 18 ga. galvanized steel with a welded seam, 3" wide.*
- *-Blades are 18 ga. galvanized steel.*
- *-Bearings are ½" oil impregnated bronze.*
- *-Control shaft is ⅜" sq. stock.*
- *-Blade hardware will be the slide pin type made of die cast steel.*
- *-Blade stop is 18 ga. galvanized steel.*
- *-Tie rods are ¼" round stock.*

Optional Construction:

- *-Neoprene blade & stainless steel jamb seals.*

Union "Blue Label" Made.

PROJECT NAME:
W/O #:
TAG #:
CONTRACTOR:
SUBMITTED BY:

PAGE: CD-5OB

AIR-RITE MFG. RESERVES THE RIGHT TO CHANGE SPECIFICATIONS WITHOUT NOTICE.

AIR-RITE MANUFACTURING

MODEL: CD-5OB

STANDARD DAMPER PRICING

ROUND OPPOSED BLADE VOLUME DAMPER

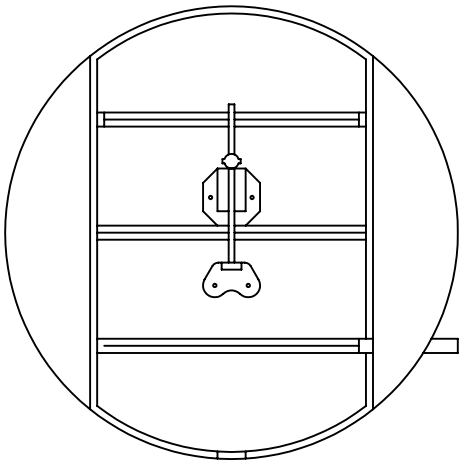

	LIST
12"Ø THRU 13"Ø	$145.00
14"Ø THRU 17"Ø	$168.00
18"Ø THRU 21"Ø	$215.00
22"Ø THRU 26"Ø	$250.00
27"Ø THRU 30"Ø	$285.00
31"Ø THRU 32"Ø	$330.00
33"Ø THRU 36"Ø	$370.00
37"Ø THRU 40"Ø	$420.00
41"Ø THRU 44"Ø	$472.00

MODEL CD-5OB OPPOSED BLADE MINIMUM SIZE 12"Ø

DAMPER OPTIONAL CONSTRUCTION PRICING

ALUMINUM CONSTRUCTION . . . . . LIST X 1.50

BLADE AND JAMB SEALS . . . . . LIST X 1.35

AIR-RITE MFG. RESERVES THE RIGHT TO CHANGE
SPECIFICATIONS WITHOUT NOTICE.

AIR-RITE MANUFACTURING

SUBMITTAL/FABRICATION DETAIL:
MODEL: CD-6 SINGLE BLADE ROUND DAMPER LIGHT GAUGE

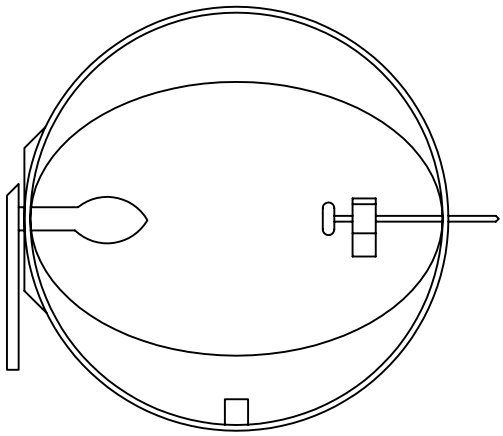

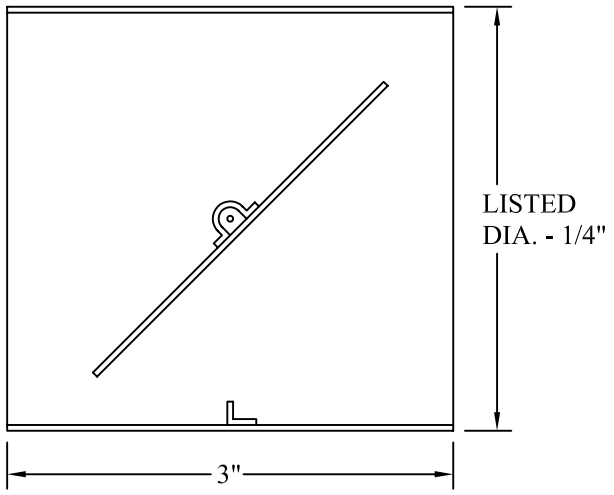

Count	Size

Standard Construction

- -3" x 20 ga. galvanized steel frame
- -22 ga. galvanized steel blade.
- -1/4" retractable bearings.
- -1/4" quadrant handle.
- -20 ga. blade stop.

Union "Blue Label" Made.

PROJECT NAME:
W/O #:
TAG #:
CONTRACTOR:
SUBMITTED BY:

PAGE: CD-6

AIR-RITE MFG. RESERVES THE RIGHT TO CHANGE SPECIFICATIONS WITHOUT NOTICE.

AIR-RITE MANUFACTURING

MODEL: CD-6

STANDARD DAMPER PRICING

SINGLE BLADE ROUND DAMPERS (LIGHT GUAGE)

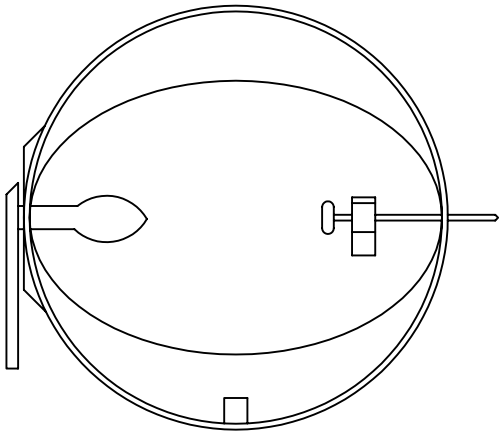

4"Ø THRU 5"Ø	30.00
6"Ø THRU 10"Ø	34.00
11"Ø THRU 12"Ø	38.00
13"Ø THRU 14"Ø	44.00
15"Ø THRU 16"Ø	50.00

DAMPER OPTIONAL CONSTRUCTION PRICING

ADD FOR ALUMINUM CONSTRUCTION: 35%

AIR-RITE MFG. RESERVES THE RIGHT TO CHANGE
SPECIFICATIONS WITHOUT NOTICE.

AIR–RITE MANUFACTURING

SUBMITTAL/FABRICATION DETAIL:
MODEL: CD-7 AIR FOIL BLADE DAMPER

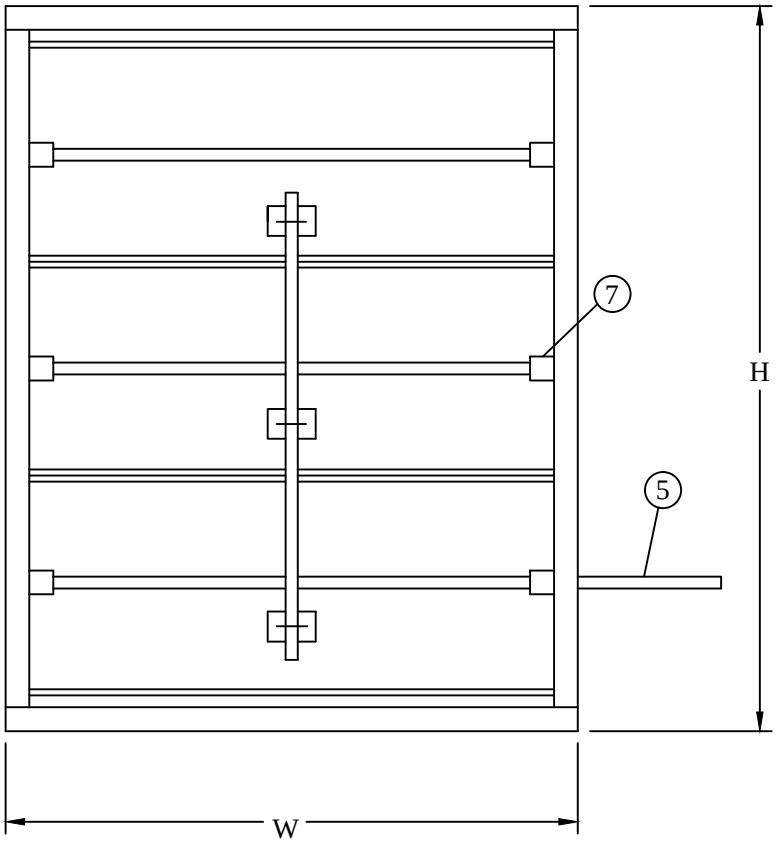

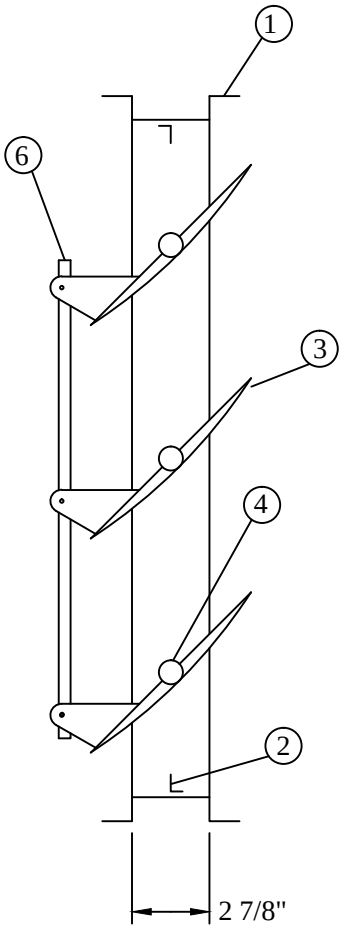

Count	W x H

Standard Construction

(1) -16 ga. hat channel frame.

(2) -3/8" angle blade stop.

(3) -16 ga. min. blade.

(4) -1/2" bronze bushing.

(5) -1/2" x 6" drive pin.

(6) -14 ga. galvanized steel linkage brackets.

(7) -Blade strap/slide pin blade hardware.

Optional Construction

☐ -Blade and jam seals.
☐ -Quade handle (1/2" or 3/8").
☐ -Electric motor.
☐ -1/2" nylon bushing.
☐ -3/8" x 6" drive pin.

Union "Blue Label" Made.

PROJECT NAME:	
W/O #:	
TAG #:	
CONTRACTOR:	
SUBMITTED BY:	

PAGE: CD-7

AIR-RITE MFG. RESERVES THE RIGHT TO CHANGE SPECIFICATIONS WITHOUT NOTICE.

AIR–RITE MANUFACTURING

MODEL: CD-7PB / CD-7OB

STANDARD DAMPER PRICING

PARALLEL / OPPOSED BLADE AIR FOIL DAMPERS

WIDTH

HEIGHT

	12	16	20	24	28	32	36	40	44	48
12	118.00	126.00	130.00	140.00	146.00	150.00	158.00	164.00	184.00	198.00
16	150.00	154.00	158.00	162.00	174.00	180.00	190.00	208.00	220.00	234.00
20	186.00	190.00	194.00	198.00	202.00	210.00	224.00	248.00	264.00	278.00
24	202.00	224.00	234.00	238.00	242.00	252.00	256.00	284.00	300.00	318.00
28	224.00	234.00	242.00	246.00	264.00	278.00	292.00	322.00	342.00	360.00
32	242.00	256.00	264.00	278.00	292.00	300.00	312.00	346.00	364.00	390.00
36	274.00	288.00	296.00	304.00	328.00	336.00	348.00	386.00	408.00	434.00
40	300.00	308.00	328.00	336.00	344.00	364.00	380.00	420.00	446.00	474.00
44	308.00	328.00	336.00	342.00	352.00	372.00	384.00	426.00	454.00	478.00
48	336.00	344.00	352.00	372.00	380.00	388.00	408.00	450.00	478.00	504.00

CD-7PB ..... LIST
CD-7OB ..... LIST x 1.10

MINIMUM OBD SIZE = 8" x 12"
MAXIMUM SINGLE PANEL WIDTH = 48"
MAXIMUM SINGLE PANEL HEIGHT = 120"
DAMPER WILL BE UNDERSIZED ¼" TO ALLOW FOR INSTALLATION TOLERANCES.

DAMPER ACCESSORIES

LOCKING QUADRANT HANDLE (½" ROUND) ..... $ 12.00 LIST
CHAIN OPERATORS INCLUDES 20 FT. OF CHAIN..... 66.00 LIST
EXTRA CHAIN, PER FOOT..... 4.00 LIST
CRANK ARM FOR MOTORIZATION BY OTHERS..... 12.00 LIST
NEOPRENE BLADE AND STAINLESS STEEL JAMB SEALS ..... LIST x 1.30
ALUMINUM CONSTRUCTION ..... LIST x 1.40
STAINLESS STEEL CONSTRUCTION .....CONSULT FACTORY

FOR DAMPERS LARGER THAN 48" x 72", USE MULTIPLE SECTIONS. IF ONE PIECE DAMPER IS REQUIRED LARGER THAN 48" x 72", MULTIPLY LIST PRICE BY 1.15.

NOTE: WHEN ORDERING, SPECIFY PARALLEL OR OPPOSED BLADE.

AIR-RITE MFG. RESERVES THE RIGHT TO CHANGE SPECIFICATIONS WITHOUT NOTICE.

AIR-RITE MANUFACTURING

SUBMITTAL/FABRICATION DETAIL:
MODEL: CD-8 SINGLE BLADE ROUND DAMPER

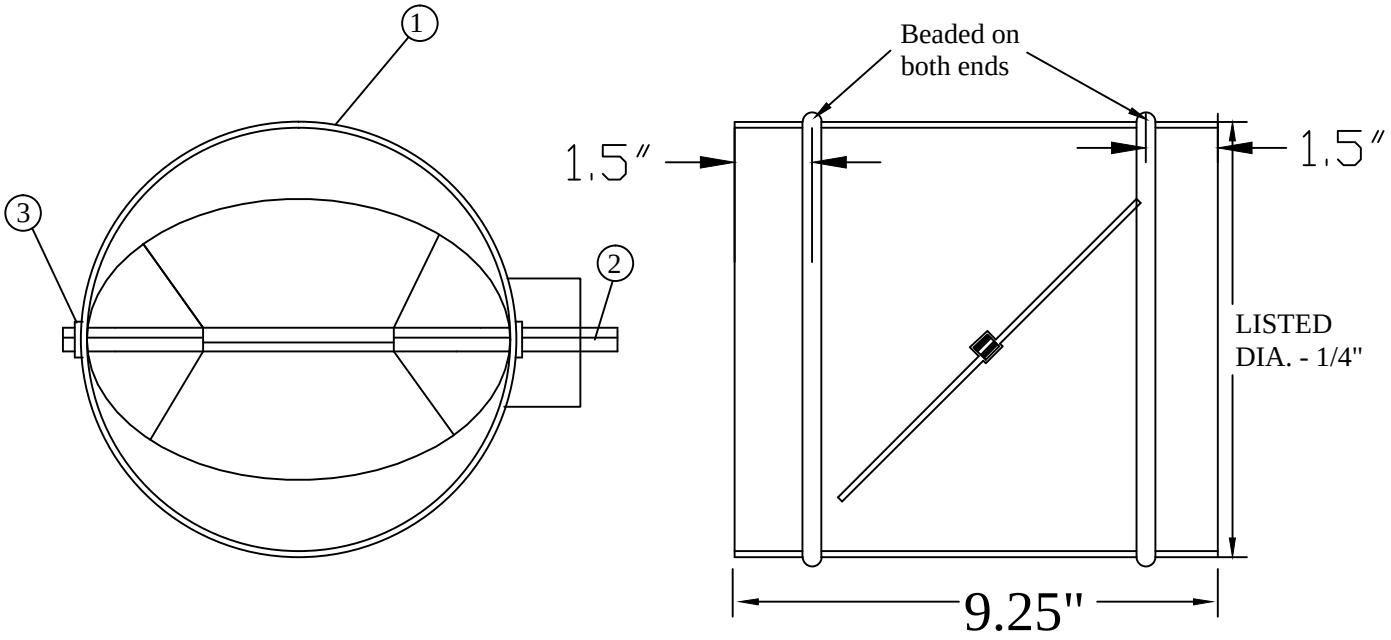

Count	Size

Standard Construction

(1) -22 ga. galvanized steel frame.

(2) -3/8" solid shaft

(3) - 3/8" Square Shaft w/ High Pressure low Leakage Bushing

Optional Construction

- ☐ -Quadrant Handle (3/8").
- ☐ -Electric motor.
- ☐ -1/2" nylon bushing.
- ☐ - Bronze Bushing
- ☐ - Blade strap & slide pin

Union "Blue Label" Made.

PROJECT NAME:	
W/O #:	
TAG #:	
CONTRACTOR:	
SUBMITTED BY:	

PAGE: CD-8

AIR-RITE MFG. RESERVES THE RIGHT TO CHANGE SPECIFICATIONS WITHOUT NOTICE.

AIR–RITE MANUFACTURING

MODEL: CD-8

STANDARD DAMPER PRICING

SINGLE BLADE ROUND DAMPERS

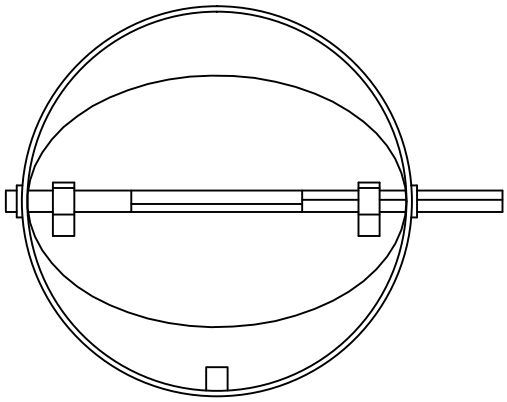

4"Ø THRU 5"Ø	46.00
6"Ø THRU 10"Ø	50.50
11"Ø THRU 12"Ø	56.50
13"Ø THRU 14"Ø	66.50
15"Ø THRU 16"Ø	78.50
17"Ø THRU 19"Ø	84.00
20"Ø THRU 22"Ø	86.50
23"Ø THRU 24"Ø	94.00
25"Ø THRU 26"Ø	98.50

DAMPER OPTIONAL CONSTRUCTION PRICING

FOR CD-8A CONSTRUCTION ADD: 15%

ADD FOR BLADE SEALS: 40%

ADD FOR ⅜"" SQUARE QUAD. HANDLE: $10.00

ADD FOR ELECTRIC DAMPER ACTUATOR: CONSULT FACTORY

ADD FOR ALUMINUM CONSTRUCTION: 35%

ADD FOR OPPOSED / PARALLEL BLADES: CONSULT FACTORY

AIR-RITE MFG. RESERVES THE RIGHT TO CHANGE SPECIFICATIONS WITHOUT NOTICE.

AIR-RITE MANUFACTURING

SUBMITTAL/FABRICATION DETAIL:
MODEL: DB-1 HEAVY DUTY DAMPER BLADE

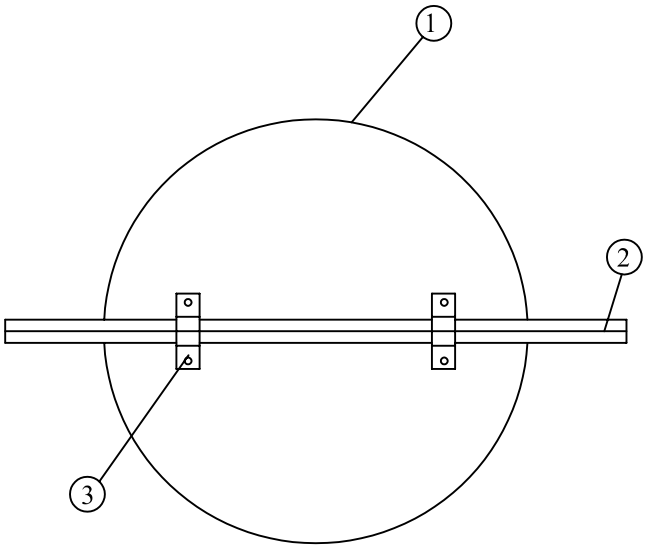

Count	Size	Rod Style

Standard Construction

(1) -18 ga. galvanized steel blade.

(2) -⅜" square rod or ½" round rod.

(3) -Blade straps/slide pin.

Optional

☐ -Locking quadrant Handle.

Union "Blue Label" Made.

PROJECT NAME:
ENGINEER:
TAG #:
CONTRACTOR:
SUBMITTED BY:

PAGE: DB-1

AIR-RITE MFG. RESERVES THE RIGHT TO CHANGE SPECIFICATIONS WITHOUT NOTICE.

AIR-RITE MANUFACTURING

SUBMITTAL/FABRICATION DETAIL:
MODEL: DB-2 LIGHT GUAGE DAMPER BLADE

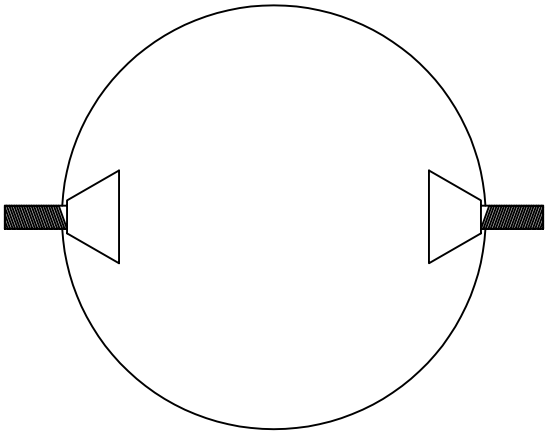

Count	Size	Rod Style

Standard Construction
(1) -26 ga. galvanized steel blade.

Optional
☐ -Locking quadrant Handle.

Union "Blue Label" Made.

PROJECT NAME:
W/O #:
TAG #:
CONTRACTOR:
SUBMITTED BY:

PAGE: DB-2

AIR-RITE MFG. RESERVES THE RIGHT TO CHANGE SPECIFICATIONS WITHOUT NOTICE.

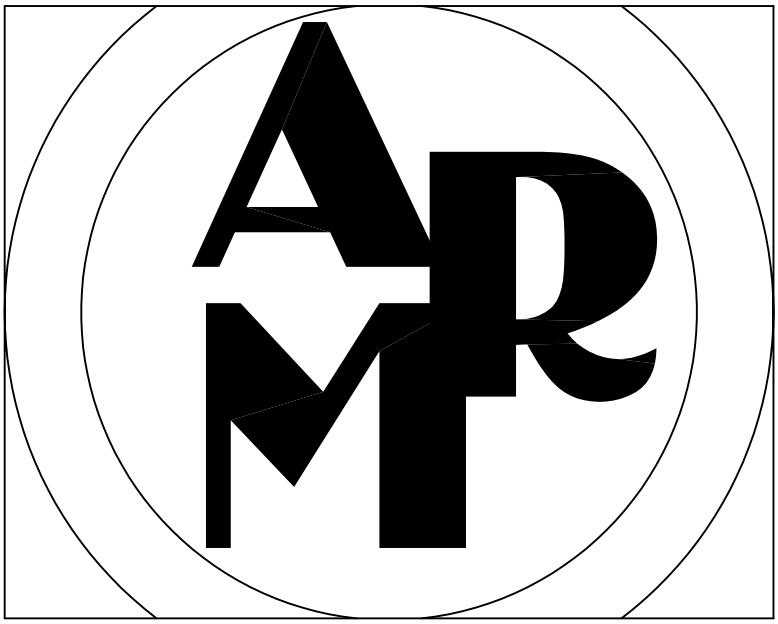

AIR-RITE MANUFACTURING, LLC

BACKDRAFT DAMPERS

AIR-RITE MANUFACTURING

SUBMITTAL/FABRICATION DETAIL:
MODEL: BDD-1 ROUND BACKDRAFT DAMPER

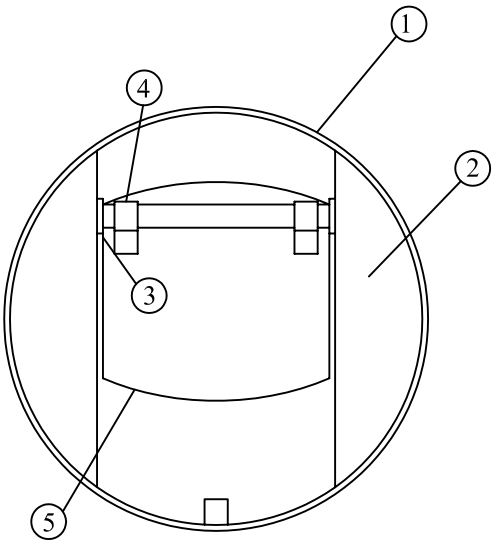

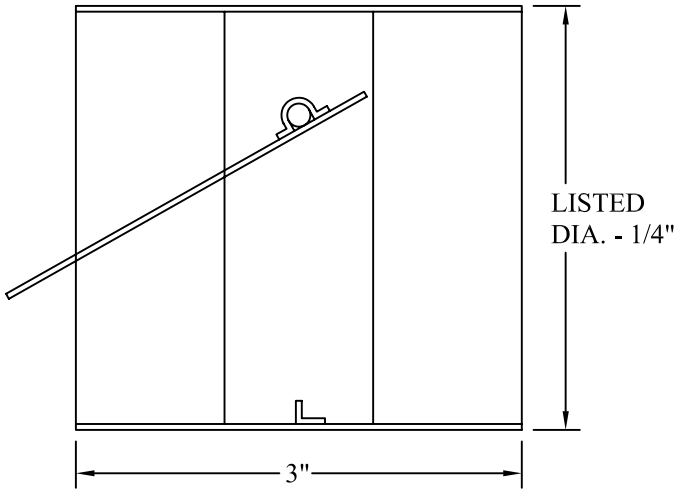

Count	Size

Standard Construction

(1) -16 ga. galvanized steel frame.

(2) -16 ga. block outs (sized to over-all dimension of the damper).

(3) -1/2" brass bushing.

(4) -Blade straps/slide pin.

(5) -.063 aluminum blade.

Optional Construction

☐ -Aluminum construction.
☐ -Adjustable counter weights.
☐ -Nylon bushings.

Union "Blue Label" Made.

PROJECT NAME:
W/O #:
TAG #:
CONTRACTOR:
SUBMITTED BY:

PAGE: BDD-1

AIR-RITE MFG. RESERVES THE RIGHT TO CHANGE SPECIFICATIONS WITHOUT NOTICE.

AIR-RITE MANUFACTURING

MODEL: BDD-1

STANDARD DAMPER PRICING

ROUND BACK-DRAFT DAMPERS

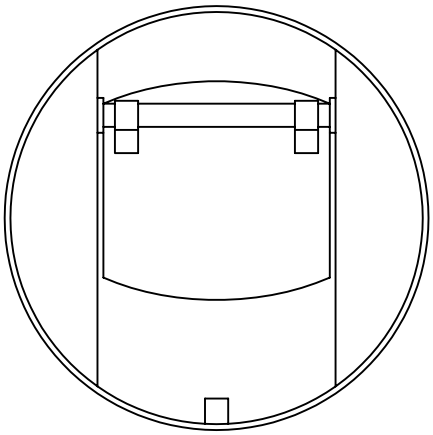

ADJUST SLIDE TYPE
COUNTERBALANCE.....ADD 15%

4" TO 5 ½"	96.00
6" TO 10"	122.00
10 ½" TO 14"	148.00
14 ½" TO 18"	174.00
18 ½" TO 22"	200.00
22 ½" TO 26"	226.00
27" TO 32"	252.00

CONTACT FACTORY FOR SIZES OVER 32"Ø.

ALL ALUMINUM CONSTRUCTION.....ADD 40%.

AIR-RITE MFG. RESERVES THE RIGHT TO CHANGE
SPECIFICATIONS WITHOUT NOTICE.

AIR-RITE MANUFACTURING

SUBMITTAL/FABRICATION DETAIL
MODEL: BDD-2 BAROMETRIC RELIEF DAMPER

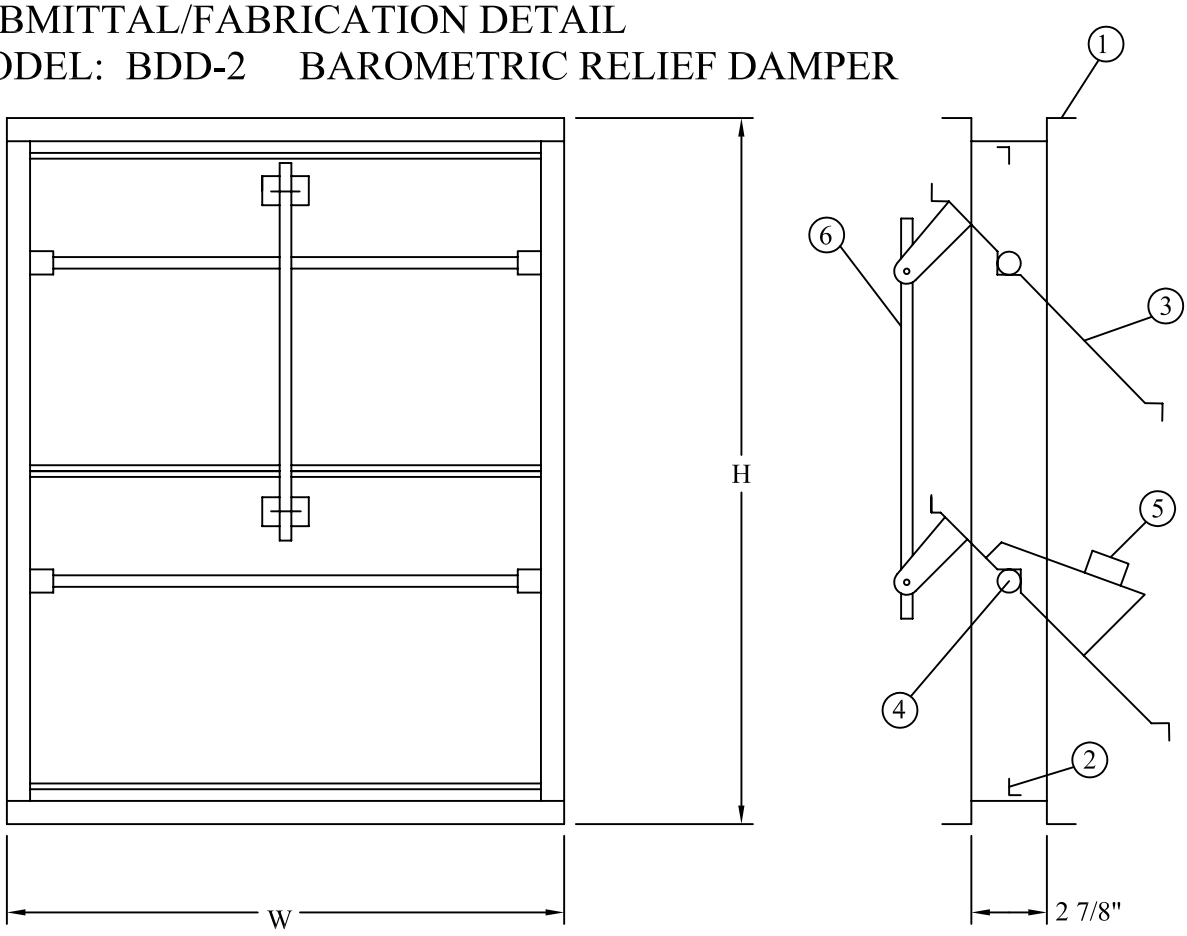

MOUNTING: ☐ **HORIZONTAL** ☐ **VERTICAL**

AIR FLOW: ☐ **UP** ☐ **DOWN**

Count	W x H

Standard Construction

(1) -16 ga. hat channel frame.

(2) -3/8" angle blade stop.

(3) -.063 Aluminum blade.

(4) -1/2" brass bushing.

(5) -Adjustable counter weight.

(6) -14 ga. galvanized steel linkage brackets.

(7) -Blade strap/slide pin blade hardware.

Optional Construction

☐ -Foam blade seals.
☐ -Flange frame.
☐ -All aluminum construction.
☐ -20 ga. galvanized steel blades.
☐ -Nylon bushings.

Union "Blue Label" Made.

PROJECT NAME:	
W/O #:	
TAG #:	
CONTRACTOR:	
SUBMITTED BY:	

PAGE: BDD-2

AIR-RITE MFG. RESERVES THE RIGHT TO CHANGE SPECIFICATIONS WITHOUT NOTICE.

AIR-RITE MANUFACTURING

MODEL: BDD-2

STANDARD DAMPER PRICING

BAROMETRIC RELIEF / BACK-DRAFT DAMPERS

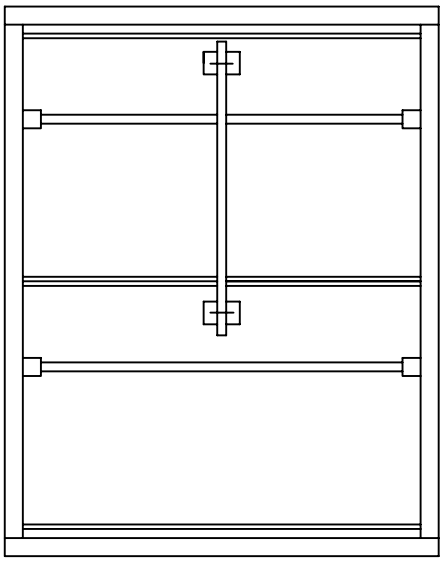

DAMPER OPTIONAL CONSTRUCTION PRICING

FOAM BLADE SEALS.....ADD 8.0%

FLANGE FRAME.....ADD 45%

GALVANIZED STEEL DAMPER BLADES.....NO CHARGE

ALL ALUMINUM CONSTRUCTION.....ADD 40%

WIDTH

HEIGHT	12	18	24	30	36	42	48	54
12	158	184	202	240	312	344	362	392
18	180	222	232	272	352	382	396	424
24	202	248	260	306	386	418	428	458
30	224	276	288	340	420	454	460	494
36	246	302	318	374	454	490	494	534
42	268	330	346	406	488	508	526	576
48	290	356	376	440	522	558	564	624
54	312	384	406	472	556	600	594	672
60	334	412	436	506	590	614	636	726

SPECIFY VERTICAL OR HORIZONTAL MOUNITNG APPLICATION WHEN ORDERING.

AIR-RITE MFG. RESERVES THE RIGHT TO CHANGE SPECIFICATIONS WITHOUT NOTICE.

AIR-RITE MANUFACTURING

SUBMITTAL/FABRICATION DETAIL
MODEL: BDD-3 FABRIC BACKDRAFT DAMPER

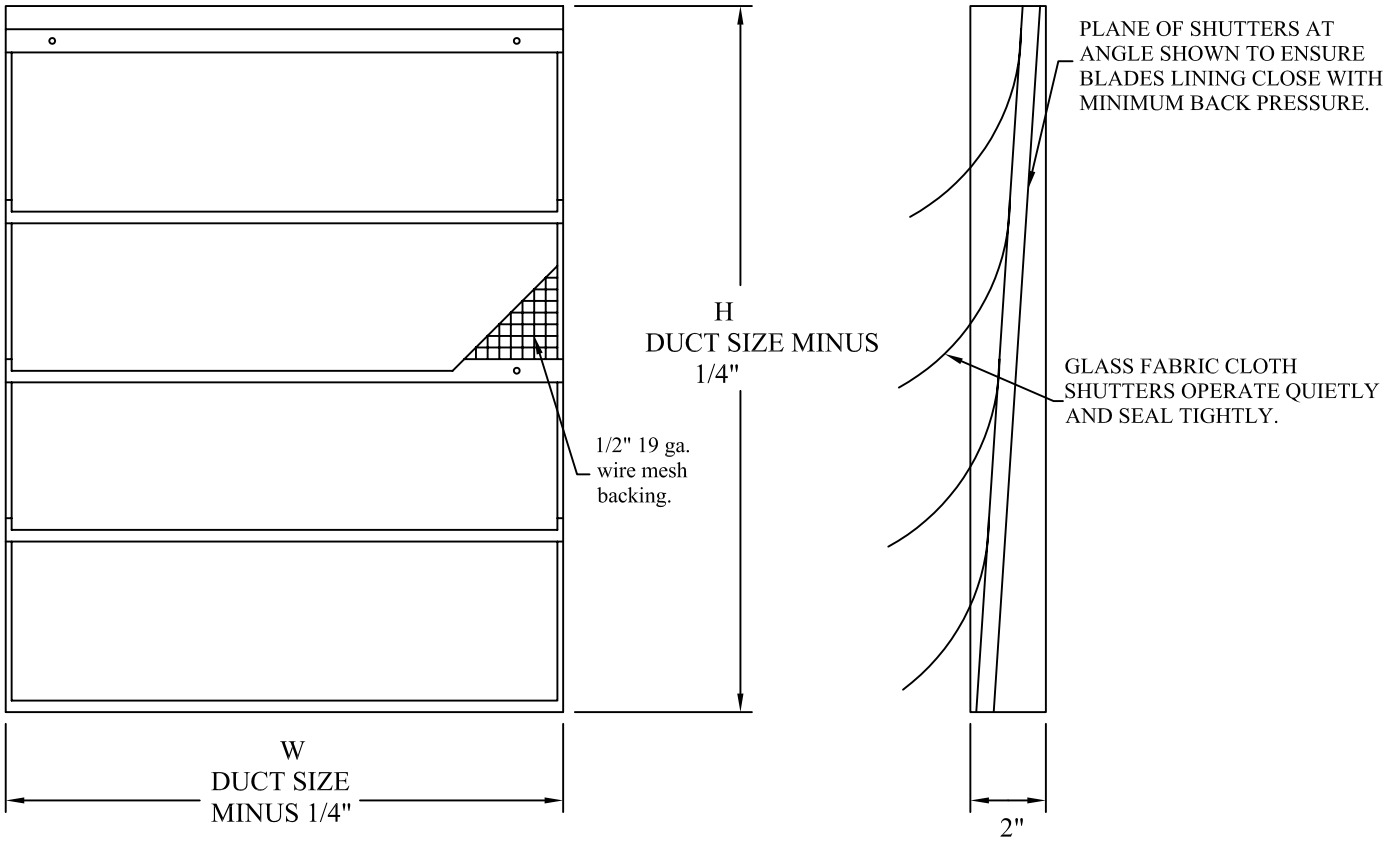

Count	W x H

Standard Construction

-20 ga. galvanized steel frame.

-1/2" 19 ga. wire mesh backing.

-UL and California State fire marshall approved ventglas woven glass fabric double coated with neoprene.

Union "Blue Label" Made.

PROJECT NAME:
ENGINEER:
TAG #:
CONTRACTOR:
SUBMITTED BY:

PAGE: BDD-3

AIR-RITE MFG. RESERVES THE RIGHT TO CHANGE SPECIFICATIONS WITHOUT NOTICE.

AIR–RITE MANUFACTURING

SUBMITTAL/FABRICATION DETAIL
MODEL: BDD-3R ROUND FABRIC BACKDRAFT DAMPER

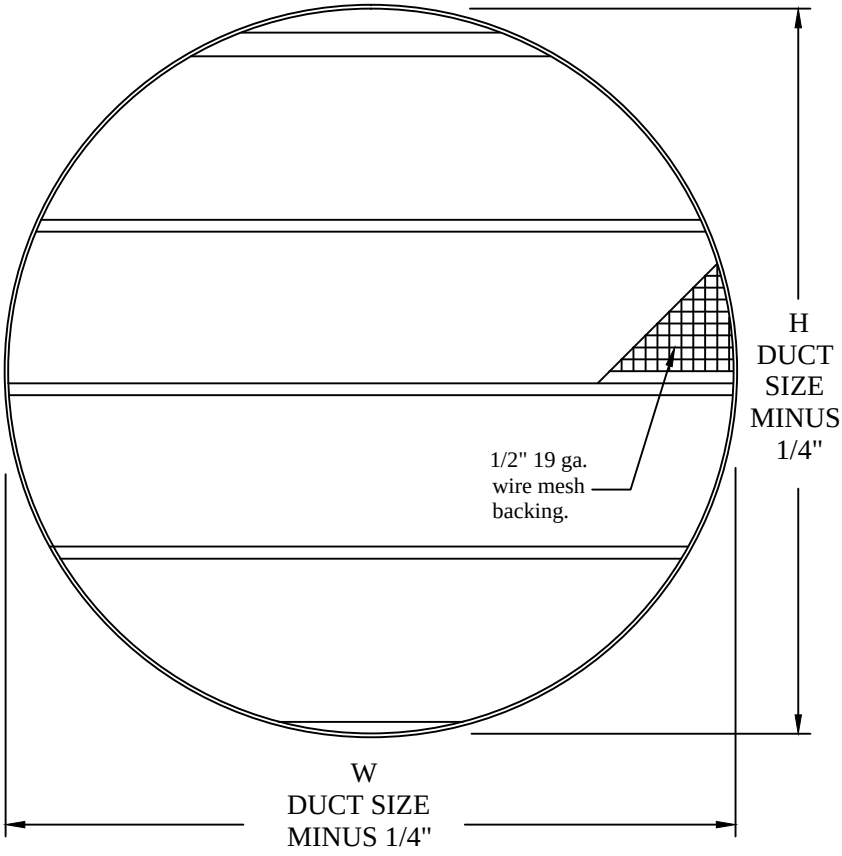

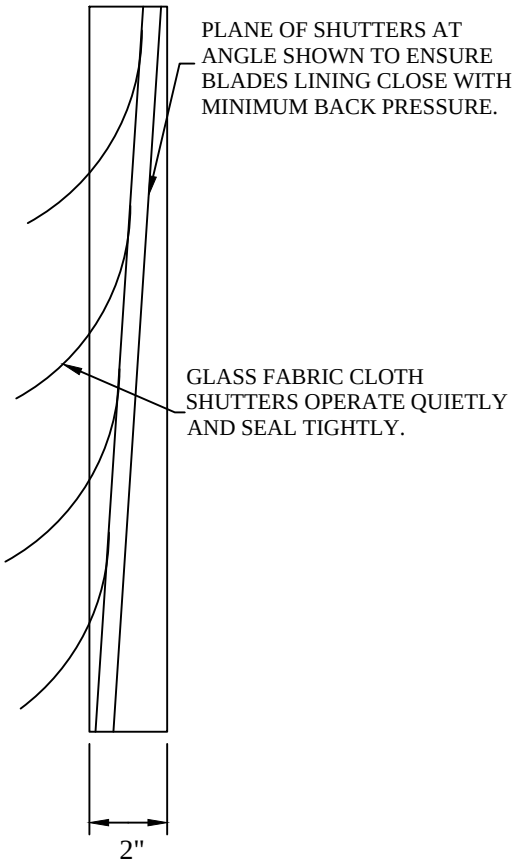

Count	W x H

Union "Blue Label" Made.

Standard Construction

-20 ga. galvanized steel frame.

-1/2" 19 ga. wire mesh backing.

-UL and California State fire marshall approved ventglas woven glass fabric double coated with neoprene.

PROJECT NAME:	
ENGINEER:	
TAG #:	
CONTRACTOR:	
SUBMITTED BY:	

AIR-RITE MFG. RESERVES THE RIGHT TO CHANGE SPECIFICATIONS WITHOUT NOTICE.

AIR-RITE MANUFACTURING

MODEL: BDD-3

STANDARD DAMPER PRICING

FABRIC BLADE BACK-DRAFT DAMPERS

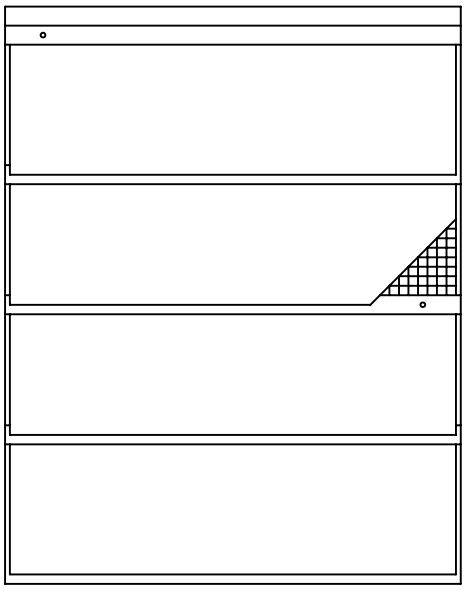

OPTIONS:

FLANGED FRAME.....ADD 18%.

ALUMINUM CONSTRUCTION.....ADD 55%.

WIDTH

HEIGHT	12"	16"	20"	24"	28"	32"	36"	40"	44"	48"
12"	94	100	102	108	114	118	122	128	134	140
16"	100	104	110	114	120	126	132	138	144	150
20"	116	120	128	134	140	148	154	158	166	172
24"	136	142	148	154	162	168	176	184	190	196
28"	156	164	170	176	184	192	200	206	212	222
32"	170	182	190	198	204	212	222	230	240	248
36"	194	204	212	220	230	238	246	254	262	272
40"	212	222	230	240	250	260	270	280	290	300
44"	230	242	252	264	274	284	294	304	314	324
48"	250	262	274	286	296	308	320	330	340	348

AIR-RITE MFG. RESERVES THE RIGHT TO CHANGE
SPECIFICATIONS WITHOUT NOTICE.

AIR-RITE MANUFACTURING

SUBMITTAL/FABRICATION DETAIL:
MODEL: BDD-4 BACKDRAFT DAMPER - VERTICAL/HORIZONTAL

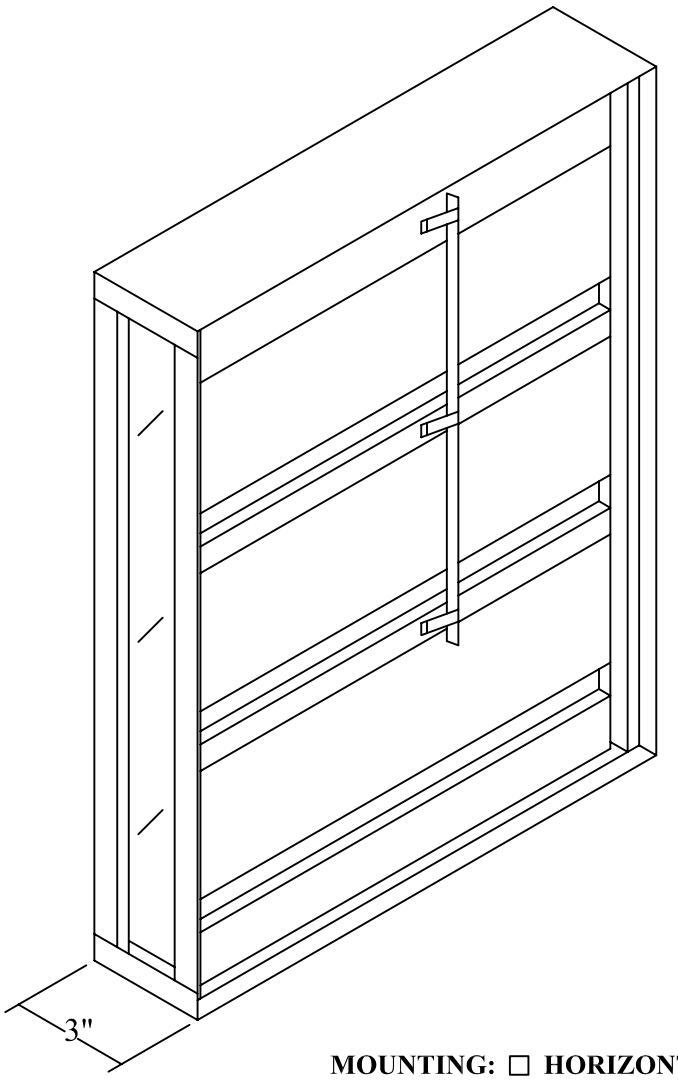

MOUNTING: ☐ **HORIZONTAL**
☐ **VERTICAL**

AIR FLOW: ☐ **UP**
☐ **DOWN**

VERTICAL: MAXIMUM ON PANEL WIDTH 48".

HORIZONTAL: MAXIMUM ONE PANEL WIDTH 36",
ALSO MUST SPECIFY AIR FLOW
AS UP OR DOWN.

COUNTERBALANCE AS NEEDED.

Standard Construction

1. FRAME - 18 GA. GALV. FLAT TOP & BOTTOM HAT CHANNEL SIDES.
2. BLADES - FORMED ALUMINUM, .032 GA.
3. AXELS - 12 GA. WIRE.
4. LINKAGE - FORMED .040 ALUMINUM.
5. BLADE STOPS - 20 GA. GALV. SPOT WELDED TO FRAME.
6. SEALS - URETHANE SPONGE ¾" WIDE.

NOTE: DAMPER WILL BE BUILT ¼" UNDERSIZED.

Count	Size

Union "Blue Label" Made.

PROJECT NAME:
W/O #:
TAG #:
CONTRACTOR:
SUBMITTED BY:

PAGE: BDD-4

AIR-RITE MFG. RESERVES THE RIGHT TO CHANGE SPECIFICATIONS WITHOUT NOTICE.

AIR-RITE MANUFACTURING

MODEL: BDD-4

STANDARD DAMPER PRICING

BACK-DRAFT DAMPERS

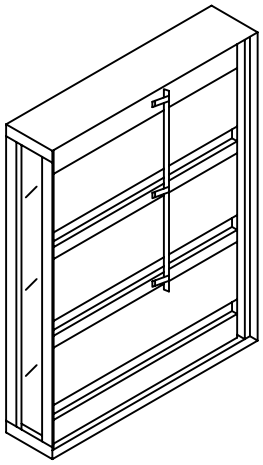

OPTIONS: FLANGE FRAME.....ADD 18%
BIRDSCREEN.....ADD 30%
<THIS INCLUDES A FRAME>
ALL ALUMINUM.....ADD 40%

NOTE: ON HORIZONTAL DAMPERS, PLEASE INCLUDE INFORMATION ON AIR UP OR AIR DOWN.

WIDTH

HEIGHT	6	8	10	12	14	16	18	20	22	24	26	28	30
6	112	118	124	128	134	136	140	146	148	156	158	164	170
8	124	130	136	140	146	148	152	158	162	168	174	176	182
10	136	142	148	152	158	162	164	170	174	180	182	188	192
12	148	154	160	164	170	174	176	182	186	188	192	198	204
14	160	166	172	176	180	182	186	192	194	200	204	210	212
16	172	178	184	188	192	194	198	204	206	210	212	218	224
18	184	190	196	200	204	206	210	216	218	222	224	230	234
20	196	204	208	212	216	218	222	224	228	234	236	240	246
22	208	214	218	222	224	228	230	236	240	242	246	252	254
24	220	226	230	234	236	240	242	248	252	254	258	260	266
26	232	238	242	246	248	252	254	258	260	264	266	272	276
28	244	250	254	258	260	264	266	270	272	276	278	282	288
30	258	264	266	270	272	276	278	282	286	288	290	294	296
32	270	276	278	282	284	288	290	294	298	300	302	306	310
34	280	284	288	290	294	296	300	302	308	310	312	316	318
36	294	296	300	302	304	306	310	312	316	318	322	324	328

AIR-RITE MFG. RESERVES THE RIGHT TO CHANGE SPECIFICATIONS WITHOUT NOTICE.

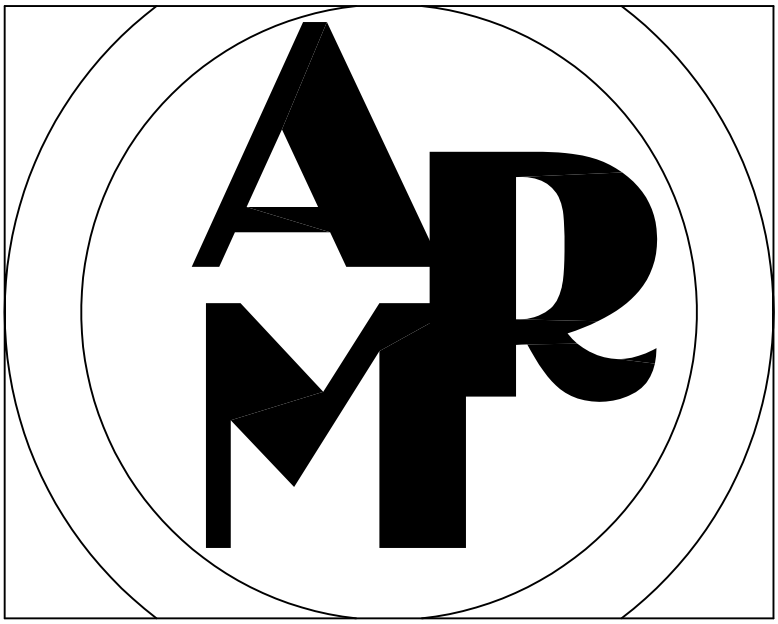

AIR-RITE MANUFACTURING, LLC

ADAPTORS

AIR–RITE MANUFACTURING

SUBMITTAL/FABRICATION DETAIL
MODEL: A-1 SQUARE TO ROUND REGISTER ADAPTER.

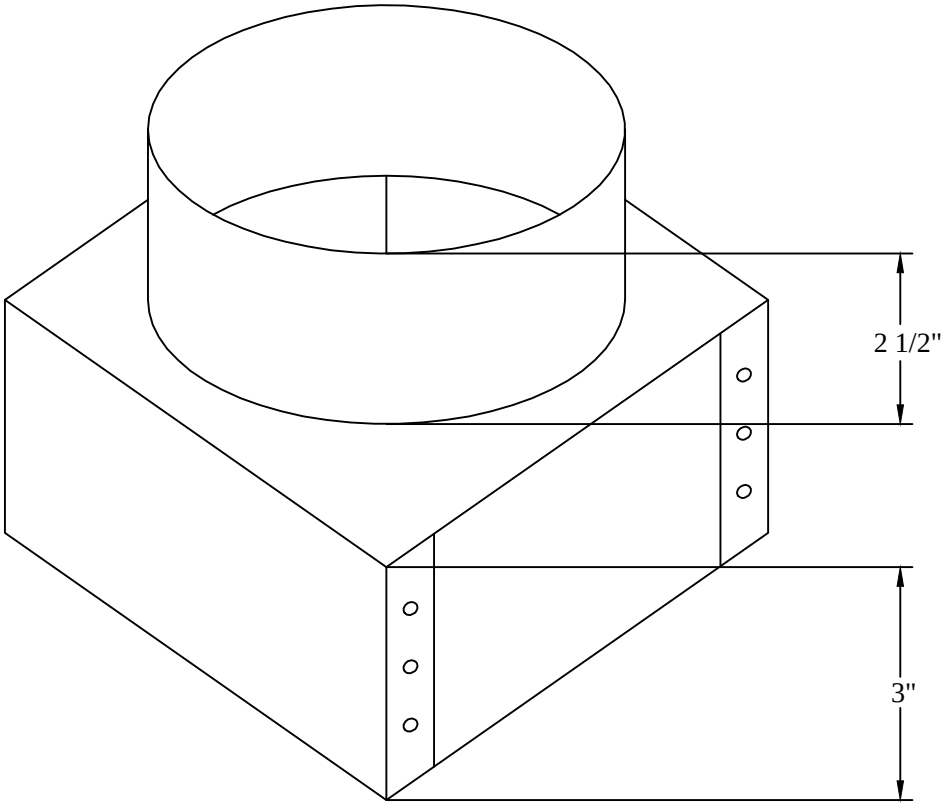

Count	W x L	Dia.

Union "Blue Label" Made.

Standard Construction
- -Nominal 26 ga. construction.
- -Button Loc corners.
- -Barrel built 1/4" undersize.
- -3" Standard Base Height

Optional Construction:
- ☐ -6" deep base.
- ☐ -Beaded Barrel.
- ☐ -Rectangular box.
- ☐ -Optional base heights.

PROJECT NAME:	
W/O #:	
TAG #:	
CONTRACTOR:	
SUBMITTED BY:	

PAGE: A-1

AIR-RITE MFG. RESERVES THE RIGHT TO CHANGE SPECIFICATIONS WITHOUT NOTICE.

AIR-RITE MANUFACTURING

MODEL: A-1, A-3

STANDARD ADAPTOR PRICING

SQUARE TO ROUND REGISTER ADAPTORS

6x6 to 5"Ø	11.36
6x6 to 6"Ø	11.36
8x8 to 6"Ø	12.96
8x8 to 8"Ø	12.96
9x9 to 6"Ø	13.24
9x9 to 8"Ø	13.24
9x9 to 9"Ø	13.24
10x10 to 6"Ø	14.24
10x10 to 8"Ø	14.24
10x10 to 10"Ø	14.24
12x12 to 8"Ø	15.76
12x12 to 10"Ø	15.76
12x12 to 12"Ø	15.76
14x14 to 10"Ø	17.00
14x14 to 12"Ø	17.00
14x14 to 14"Ø	17.00
15x15 to 12"Ø	17.48
15x15 to 14"Ø	17.48
16x16 to 12"Ø	18.64
16x16 to 14"Ø	18.64
16x16 to 16"Ø	18.64
18x18 to 10"Ø	21.04
18x18 to 12"Ø	21.04
18x18 to 14"Ø	21.04
18x18 to 16"Ø	21.04
18x18 to 18"Ø	21.04
20x20 to 10"Ø	25.20
20x20 to 12"Ø	25.20
20x20 to 14"Ø	25.20
20x20 to 16"Ø	25.20
20x20 to 18"Ø	25.20
20x20 to 20"Ø	25.20
21x21 to 14"Ø	29.20
21x21 to 16"Ø	29.20
21x21 to 18"Ø	29.20
21x21 to 20"Ø	29.20
22x10 to 8"Ø	29.20
22x10 to 10"Ø	29.20
22x22 to 10"Ø	29.80
22x22 to 12"Ø	29.80
22x22 to 14"Ø	29.80
22x22 to 16"Ø	29.80
22x22 to 18"Ø	29.80
22x22 to 20"Ø	29.80
22x22 to 22"Ø	29.80
24x24 to 10"Ø	33.00
24x24 to 12"Ø	33.00
24x24 to 14"Ø	33.00
24x24 to 16"Ø	33.00
24x24 to 18"Ø	33.00
24x24 to 20"Ø	33.00
24x24 to 22"Ø	33.00

ADD FOR A-3 MODEL CONSTRUCTION: 15%

SRA OPTIONAL CONSTRUCTION PRICING

ADD FOR 8" BASE: 30%
ADD FOR 6" BASE: 20%
ADD FOR 2" BASE: NO CHARGE
ADD FOR ALUMINUM CONSTRUCTION: 40%

AIR-RITE MFG. RESERVES THE RIGHT TO CHANGE SPECIFICATIONS WITHOUT NOTICE.

AIR-RITE MANUFACTURING

SUBMITTAL/FABRICATION DETAIL
MODEL: A-2 ROUND TO ROUND ADAPTER.

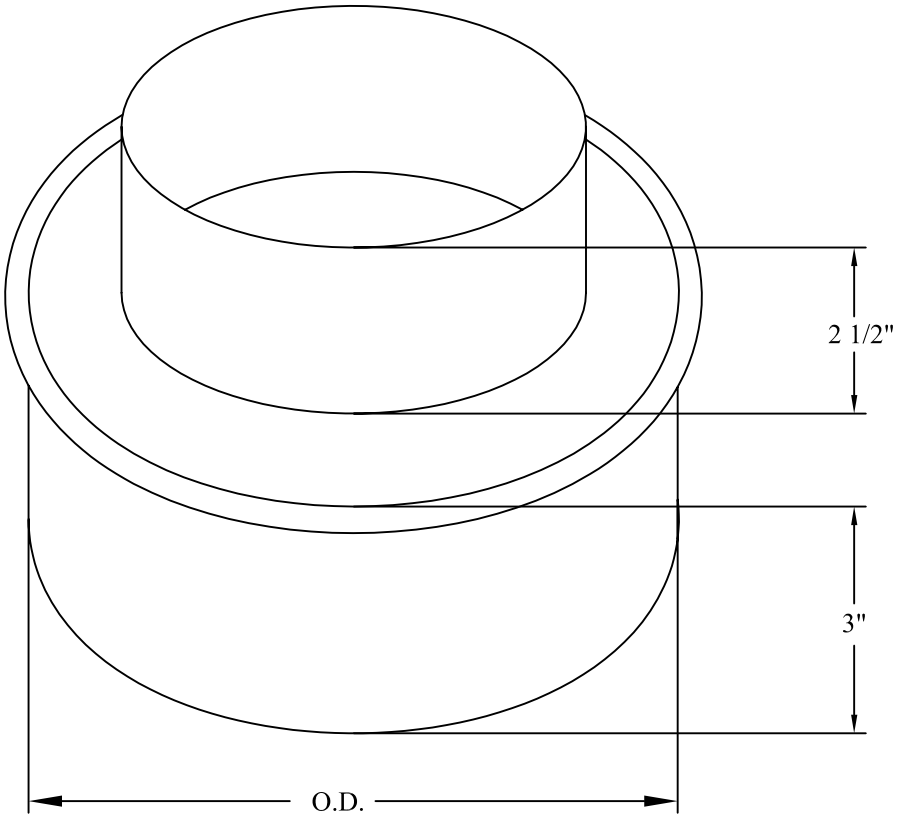

Count	Inside Dia.	Outside Dia.

Standard Construction

-Nominal 26 ga. construction.

Optional Construction:

☐ -6" deep base.
☐ -I.D. side.
☐ -O.D. side.

Union "Blue Label" Made.

PROJECT NAME:
W/O #:
TAG #:
CONTRACTOR:
SUBMITTED BY:

PAGE: A-2

AIR-RITE MFG. RESERVES THE RIGHT TO CHANGE SPECIFICATIONS WITHOUT NOTICE.

AIR-RITE MANUFACTURING

MODEL: A-2

STANDARD ADAPTOR PRICING

SQUARE TO ROUND REGISTER ADAPTORS

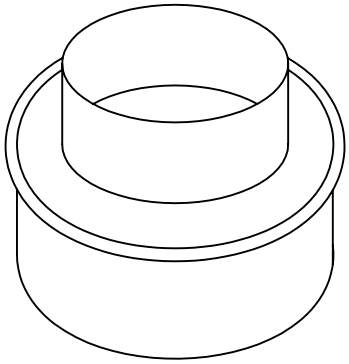

OPTIONAL CONSTRUCTION PRICING

ADD FOR TAPERED BODY: 75%

ADD FOR ALUMINUM CONSTRUCTION: 40%

6"Ø to 4"Ø	17.84
6"Ø to 5"Ø	17.84
7"Ø to 6"Ø	17.98
8"Ø to 6"Ø	19.70
8"Ø to 7"Ø	19.70
9"Ø to 8"Ø	21.08
10"Ø to 8"Ø	23.48
10"Ø to 9"Ø	23.48
12"Ø to 10"Ø	26.12
14"Ø to 10"Ø	33.00
14"Ø to 12"Ø	33.00
16"Ø to 12"Ø	39.88
16"Ø to 14"Ø	39.88
18"Ø to 14"Ø	49.50
18"Ø to 16"Ø	49.50

AIR-RITE MFG. RESERVES THE RIGHT TO CHANGE
SPECIFICATIONS WITHOUT NOTICE.

AIR-RITE MANUFACTURING

SUBMITTAL/FABRICATION DETAIL
MODEL: A-3 SQUARE TO ROUND REGISTER ADAPTER W/ SIDE INLET.

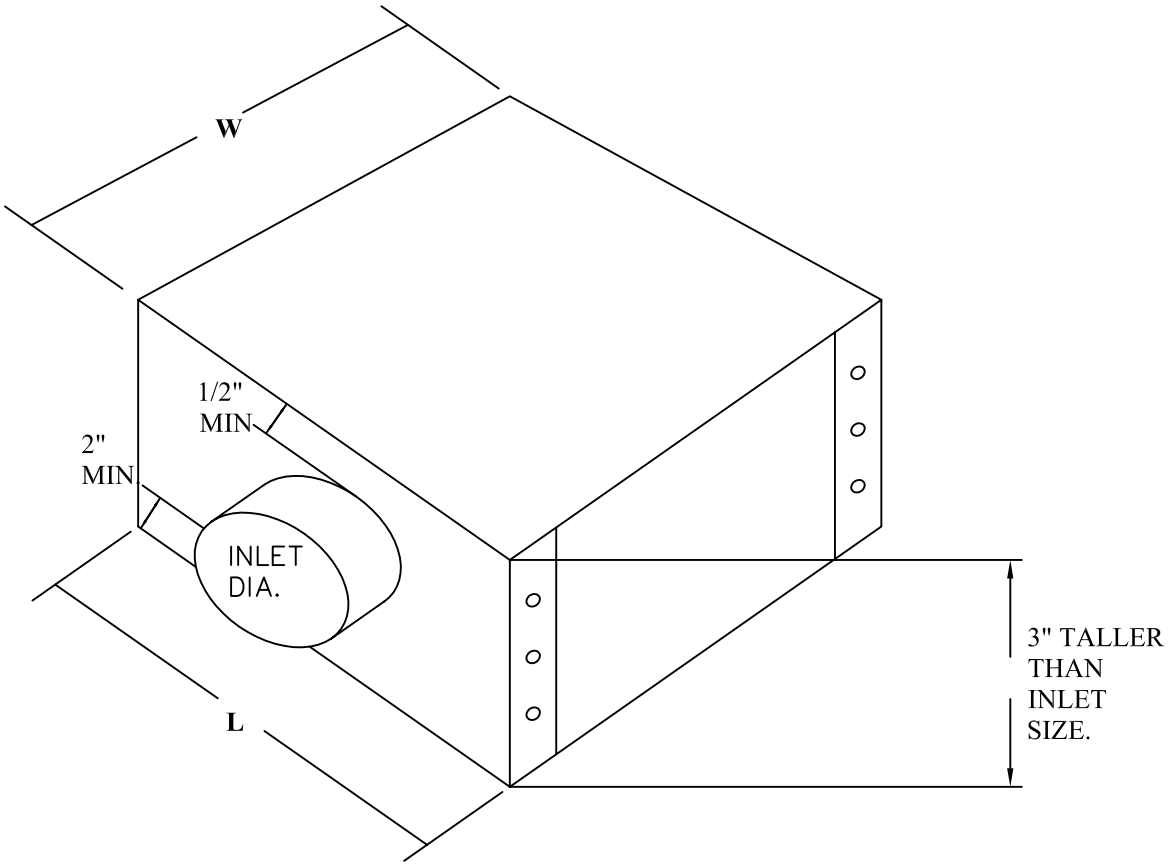

Count	W x L	Dia.

Standard Construction

-Nominal 26 ga. construction.
-Spot welded corners.
-Barrel built 1/4" undersize.

Optional Construction:

☐ -Lined Box.
☐ -Beaded Barrel.
☐ -Rectangular box.
☐ -Optional base heights.
☐ -Turning Vane.

Union "Blue Label" Made.

PROJECT NAME:
ENGINEER:
TAG #:
CONTRACTOR:
SUBMITTED BY:

PAGE: A-3

AIR-RITE MFG. RESERVES THE RIGHT TO CHANGE SPECIFICATIONS WITHOUT NOTICE.

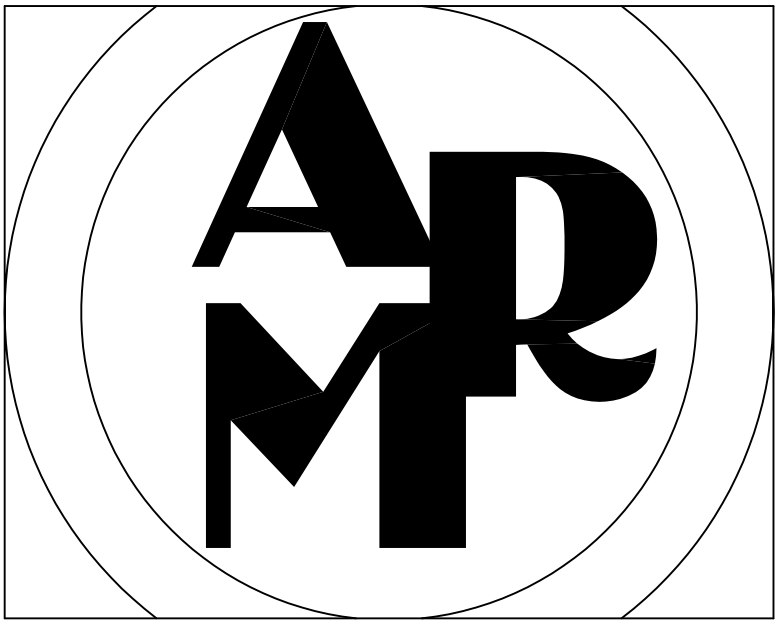

AIR-RITE MANUFACTURING, LLC

ROOF HOODS

AIR-RITE MANUFACTURING

SUBMITTAL/FABRICATION DETAIL: GRAVITY INTAKE, GRAVITY RELIEF HOODS
MODEL: GIH-1, GRH-1 (TYPE 1 & 2)

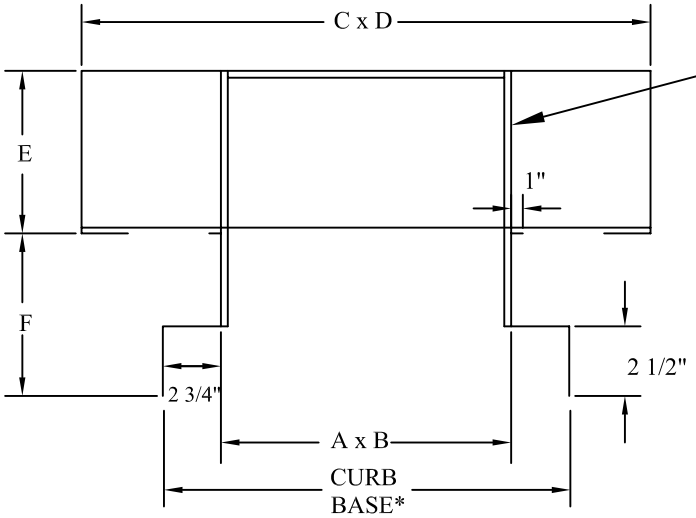

SHOWN WITH ADDTIONAL HOOD SUPPORTS

TYPE 1

SIZE	GALVANIZED GUAGES		ALUMINUM GUAGES		ADDIT HOOD SUPPORT
	BASE	HOOD	BASE	HOOD	
A x B = 0 TO 12 SQ. FT.	18	22	14	18	
A x B = 12 TO 18 SQ. FT.	18	20	14	16	X
A x B = OVER 18 SQ. FT.	18	18	14	14	X

*TO BE 1 1/2" LARGER THAN CURB O.D.

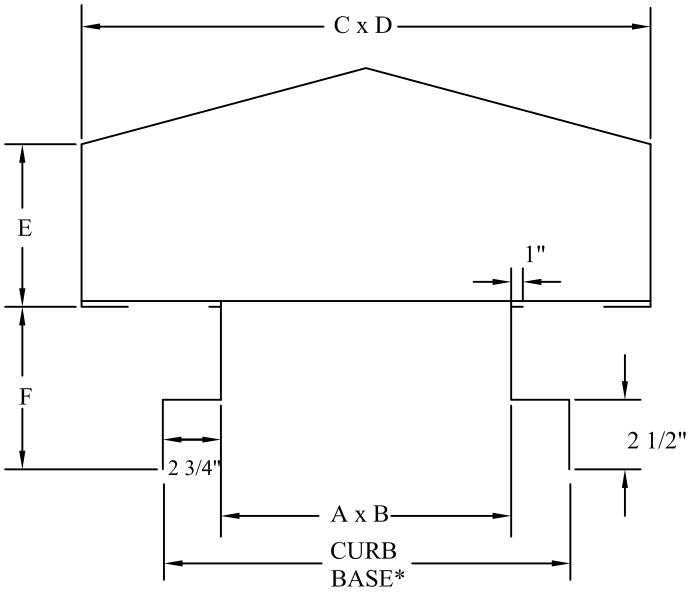

TYPE 2

COUNT	SIZE

Standard Construction (Typ. Type 1 & 2)

1. -Standard galvanized steel.
2. -1/2" x 19 ga. bird screen.
3. -Sealed corners.
4. -Welded curb cap.

Optional Construction (Typ. Type 1 & 2)

- ☐ -Paint Loc construction.
- ☐ -Aluminum construction.
- ☐ -Hinged bonnet.
- ☐ -Interior condensate coating.
- ☐ -Insulated bonnet.
- ☐ -Washable filters size:
  - ☐ Alum. ☐ Fiberglass
- ☐ -Insect screen.
- ☐ -Paint.

Union "Blue Label" Made.

PROJECT NAME:	
W/O #:	
TAG #:	
CONTRACTOR:	
SUBMITTED BY:	

PAGE: GH-1

AIR-RITE MFG. RESERVES THE RIGHT TO CHANGE SPECIFICATIONS WITHOUT NOTICE.

AIR-RITE MANUFACTURING

SUBMITTAL/FABRICATION DETAIL:
MODEL: GRH-2, GIH-2 GRAVITY RELIEF HOODS (TYPE 3)

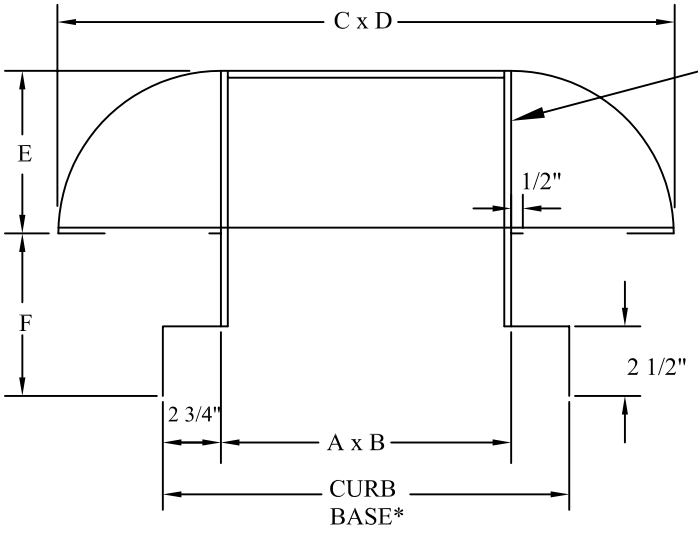

SHOWN WITH ADDTIONAL HOOD SUPPORTS

①

SIZE	GALVANIZED GUAGES		ALUMINUM GUAGES		ADDIT HOOD SUPPORT
	BASE	HOOD	BASE	HOOD	
A x B = 0 TO 12 SQ. FT.	18	22	14	18	
A x B = 12 TO 18 SQ. FT.	18	20	14	16	X
A x B = OVER 18 SQ. FT.	18	18	14	14	X

*TO BE 1 1/2" LARGER THAN CURB O.D.

COUNT	SIZE

Standard Construction (Typ. Type 1 & 2)

①-Standard galvanized steel.

②-1/2" x 19 ga. bird screen.

③-Sealed corners.

④-Welded curb cap.

Optional Construction (Typ. Type 1 & 2)

☐ -Paint Loc construction.
☐ -Aluminum construction.
☐ -Hinged bonnet.
☐ -Interior condensate coating.
☐ -Insulated bonnet.
☐ -Washable filters size:
☐ Alum. ☐ Fiberglass
☐ -Insect screen.
☐ -Paint.

Union "Blue Label" Made.

PROJECT NAME:
W/O #:
TAG #:
CONTRACTOR:
SUBMITTED BY:

PAGE: GH-2

AIR-RITE MFG. RESERVES THE RIGHT TO CHANGE SPECIFICATIONS WITHOUT NOTICE.

AIR-RITE MANUFACTURING

MODEL: GIH-1, *GIH-2

STANDARD HOOD PRICING

INTAKE HOODS

	12"	16"	20"	24"	28"	32"	36"	40"	44"	48"	52"	56"	60"	64"	68"	72"
12"	452															
16"	476	494														
20"	494	518	538													
24"	506	534	560	648												
28"	526	556	582	692	730											
32"	542	574	626	724	760	886										
36"	576	644	734	800	886	920	984									
40"	598	692	752	872	918	952	1020	1036								
44"	610	758	780	906	952	986	1060	1074	1120							
48"	712	792	856	944	978	1022	1128	1160	1166	1428						
52"	730	856	906	978	1006	1060	1160	1202	1370	1622	1700					
56"	746	880	934	1010	1040	1096	1194	1244	1648	1676	1756	2178				
60"	852	940	1000	1088	1070	1124	1312	1666	1676	1782	1816	2240	2320			
64"	882	1002	1064	1122	1334	1392	1508	1728	1816	1936	1958	2304	2396	2524		
68"	906	1026	1126	1190	1364	1626	1702	1780	1870	1950	2016	2380	2450	2660	3012	
72"	964	1096	1150	1260	1592	1676	1754	1836	1926	1988	2418	2516	2588	2746	2980	3444
76"	1000	1112	1176	1402	1628	1704	1798	1956	2046	2122	2484	2580	2656	2814	3170	3492
80"	1030	1128	1350	1426	1666	1752	1840	2000	2090	2182	2548	2650	2724	2884	3408	3510
84"	1048	1290	1390	1460	1694	1798	1882	2060	2152	2246	2614	2716	2804	3384	3486	3588
88"	1196	1318	1414	1492	1744	1826	1926	2108	2198	2294	2668	2756	3024	3460	3564	3666
92"	1226	1340	1436	1520	1772	1880	1958	2140	2248	2360	2716	2984	3100	3536	3624	3750
96"	1252	1362	1460	1550	1800	1910	2100	2200	2296	2394	2940	3064	3156	3614	3704	3830

*GIH-2 CONSTRUCTION.....ADD 25%

GALVANIZED CONSTRUCTION.....LIST
ALUMINUM CONSTRUCTION.....LIST x 50%
INSECT SCREEN.....LIST x 10%

HINGED.....1.25
UNDERCOAT.....1.25
FILTER.....1.34
ALUM. I.S.....1.20

AIR-RITE MFG. RESERVES THE RIGHT TO CHANGE
SPECIFICATIONS WITHOUT NOTICE.

GIH-1 Specifications

Air-Rite MFG.

Gravity Intake Hood

Throat Size In.	Hood Size In.	Hood Height In.	Throat Area SF	(WG) Pressure Drop				
				Non-ducted				
				0.023	0.1	0.18	0.28	0.42
				Ducted				
				0.021	0.049	0.085	0.14	0.195
				(FPM) Velocity				
				200	300	400	500	600
				(CFM) Airflow				
12 x 12	26 x 26	15	1	400	600	810	985	1200
12 x 16	26 x 31	15	1.33	540	800	1050	1300	1600
12 x 18	26 x 35	15	1.5	600	900	1200	1550	1795
12 x 24	28 x 39	15	2	800	1210	1600	2000	2375
12 x 30	28 x 50	15	2.5	1000	1500	2000	2450	3000
12 x 32	28 x 50	15	2.67	1060	1600	2120	2650	3200
12 x 36	28 x 50	15	3	1175	1800	2400	3000	3550
12 x 42	28 x 65	15	3.5	1400	2050	2800	3500	4175
12 x 48	28 x 65	15	4	1600	2400	3200	4000	4800
12 x 54	30 x 70	15	4.5	1800	2650	3600	4475	5400
16 x 16	31 x 31	15	1.78	710	1070	1420	1780	2135
16 x 18	31 x 34	15	2	800	1200	1600	2000	2400
16 x 24	31 x 40	15	2.67	1070	1600	2135	2670	3200
16 x 30	31 x 50	15	3.33	1335	2005	2670	3335	4000
16 x 32	35 x 50	15	3.56	1425	2135	2845	3555	4270
16 x 36	35 x 50	15	4	1600	2400	3200	4000	4800
16 x 42	38 x 55	15	4.67	1870	2800	3735	4665	5600
16 x 48	38 x 60	15	5.33	2135	3200	4265	5335	6410
16 x 54	38 x 70	15	6	2400	3600	4800	6000	7200
16 x 60	38 x 75	15	6.67	2672	4000	5335	6670	7990
18 x 18	34 x 34	15	2.25	900	1350	1800	2250	2700
18 x 24	34 x 40	15	3	1200	1800	2400	3000	3590
18 x 30	34 x 50	15	3.75	1500	2250	3000	3750	4500
18 x 32	34 x 50	15	4	1600	2400	3200	4000	4800
18 x 36	36 x 55	15	4.5	1800	2700	3605	4505	5400
18 x 42	36 x 62	15	5.25	2100	3155	4210	5250	6300
18 x 48	38 x 65	15	6	2400	3610	4800	6000	7200
18 x 54	38 x 75	15	6.75	2700	4050	5400	6750	8100
18 x 60	38 x 80	15	7.5	3000	4500	6005	7500	9000
18 x 66	40 x 85	15	8.25	3300	4950	6610	8250	9900
24 x 24	45 x 45	15	4	1600	2400	3200	4010	4805
24 x 30	45 x 50	15	5	2000	3000	4005	5000	6010
24 x 32	45 x 50	15	5.33	2135	3200	4265	5335	6415
24 x 36	48 x 55	15	6	2400	3600	4800	6000	7220
24 x 42	48 x 62	15	7	2790	4200	5600	7000	8400
24 x 48	50 x 70	15	8	3200	4800	6400	8000	9600
24 x 54	50 x 75	15	9	3600	5400	7200	9000	10800
24 x 60	50 x 85	15	10	3990	6000	8000	10000	12000
24 x 66	50 x 95	15	11	4410	6600	8800	11000	13200
24 x 72	50 x 100	15	12	4800	7200	9600	12000	14400
30 x 30	55 x 55	15	6.25	2500	3750	5005	6250	7505
30 x 32	55 x 58	15	6.67	2665	4000	5335	6665	8010
30 x 36	55 x 60	15	7.5	3000	4500	6000	7500	9005
30 x 42	55 x 70	15	8.75	3500	5250	7000	8750	10510

GIH-1 Specifications

Air-Rite MFG.

Gravity Intake Hood

Throat Size In.	Hood Size In.	Hood Height In.	Throat Area SF	(WG) Pressure Drop				
				Non-ducted				
				0.023	0.1	0.18	0.28	0.42
				Ducted				
				0.021	0.049	0.085	0.14	0.195
				(FPM) Velocity				
				200	300	400	500	600
				(CFM) Airflow				
30 x 48	55 x 78	15	10	4000	6000	8000	10000	12000
30 x 54	56 x 85	15	11.25	4500	6750	9000	11250	13500
30 x 60	58 x 90	15	12.5	5000	7500	10000	12500	15000
30 x 66	58 x 100	15	13.75	5500	8250	11000	13750	16500
30 x 72	60 x 104	15	15	5990	9000	12000	15005	18010
30 x 78	60 x 112	15	16.25	6510	9750	13000	16250	19500
32 x 32	59 x 59	15	7.11	2845	4265	5690	7115	8535
32 x 36	59 x 63	15	8	3200	4800	6400	8000	9605
32 x 42	60 x 75	15	9.33	3735	5600	7465	9335	11200
32 x 48	60 x 85	15	10.67	4270	6400	8530	10670	12800
32 x 54	60 x 85	15	12	4800	7200	9600	12000	14400
32 x 60	60 x 90	15	13.33	5335	8010	1065	1335	16005
32 x 66	60 x 100	15	14.67	5865	8790	11735	14670	17610
32 x 72	62 x 104	15	16	6400	9600	12800	16000	19215
32 x 78	62 x 112	15	17.33	6935	10400	13870	17335	20820
32 x 84	64 x 120	15	18.67	7470	11200	14935	18665	22405
36 x 36	66 x 66	15	9	3600	5400	7200	9000	10800
36 x 42	66 x 70	15	10.5	4200	6300	8400	10500	12600
36 x 48	66 x 80	15	12	4800	7200	9600	12000	14400
36 x 54	68 x 85	15	13.5	54500	8100	10800	13500	16200
36 x 60	68 x 95	15	15	6000	9000	12000	15000	18010
36 x 66	68 x 102	15	16.5	6600	9900	13200	16500	19800
36 x 72	68 x 112	15	18	7200	10800	14400	18000	21600
36 x 78	68 x 118	15	19.5	7800	11700	15600	19500	23400
36 x 84	70 x 125	15	21	8400	12600	16800	21000	25200
36 x 90	75 x 125	15	22.5	9000	13500	18000	22500	27000
42 x 42	76 x 76	15	12.25	4900	7350	9800	12250	14710
42 x 48	76 x 80	15	14	5600	8410	11200	14000	16805
42 x 54	76 x 85	15	15.75	6305	9450	12600	15750	18905
42 x 60	76 x 95	15	17.5	7005	10500	14000	17500	21000
42 x 66	78 x 107	15	19.25	7700	11550	15410	19250	23105
42 x 72	78 x 112	15	21	8400	12600	16815	21000	25200
42 x 78	78 x 125	15	22.75	9100	13650	18200	22750	27300
42 x 84	80 x 130	15	24.5	9800	14700	19600	24500	29405
42 x 90	80 x 137	15	26.25	10500	15750	21000	26250	31510
42 x 96	80 x 145	15	28	11200	16800	22400	28000	33605
48 x 48	84 x 84	15	16	6400	9600	12800	16000	19200
48 x 54	84 x 92	15	18	7200	10800	14400	18000	21600
48 x 60	84 x 102	15	20	8000	12000	16000	20005	24000
48 x 66	84 x 110	15	22	8800	13200	17600	22010	26400
48 x 72	86 x 120	15	24	9600	14400	19200	24000	28805
48 x 78	86 x 130	15	26	10400	15600	20800	26010	31210
48 x 84	86 x 137	15	28	11250	16800	22400	28010	33600

GIH-1 Specifications

Air-Rite MFG.

Gravity Intake Hood

Throat Size In.	Hood Size In.	Hood Height In.	Throat Area SF	(WG) Pressure Drop				
				Non-ducted				
				0.023	0.1	0.18	0.28	0.42
				Ducted				
				0.021	0.049	0.085	0.14	0.195
				(FPM) Velocity				
				200	300	400	500	600
				(CFM) Airflow				
48 x 90	88 x 145	15	30	12850	18005	2400	30005	3600
48 x 96	88 x 150	15	32	13600	19200	25600	32010	38400
48 x 102	90 x 155	15	34	8100	20400	27200	34000	40800
54 x 54	94 x 94	15	20.25	9000	12150	16200	20250	24300
54 x 60	94 x 98	15	22.5	9900	13500	18000	22500	27000
54 x 66	94 x 112	15	24.75	10800	14850	19800	24750	29700
54 x 72	94 x 125	15	27	10800	16200	21600	27010	32400
54 x 78	94 x 130	15	29.25	11700	17550	23400	29250	35105
54 x 84	100 x 135	15	31.5	12600	18900	25200	31500	37810
54 x 90	100 x 145	15	33.75	13500	20250	27000	33750	40500
54 x 96	105 x 145	15	36	14400	21600	28800	36000	43200
60 x 60	105 x 105	15	25	10050	15000	20015	25000	30000
60 x 66	105 x 110	15	27.5	11000	16500	22020	27550	33000
60 x 72	105 x 120	15	30	12000	18000	24000	30000	36000
60 x 78	110 x 130	15	32.5	13050	19505	26000	32510	39000
60 x 84	110 x 135	15	35	14000	21010	28000	35005	42000
60 x 90	110 x 145	15	37.5	15000	22500	30000	375500	45000
60 x 96	114 x 150	15	40	16000	24000	32000	40000	48000
60 x 102	114 x 155	15	42.5	17050	25500	34000	42500	51000
66 x 66	114 x 115	15	30.25	12100	18150	24200	30250	36305
66 x 72	114 x 120	15	33	13200	19800	26400	33010	39610
66 x 78	114 x 135	15	35.75	14350	21450	28600	35750	42915
66 x 84	114 x 145	15	38.5	15400	23110	30800	38500	46205
66 x 90	114 x 155	15	41.25	16550	24750	33000	41250	49510
66 x 96	114 x 165	15	44	17600	26400	35215	44000	52800
66 x 102	114 x 175	15	46.75	48700	28050	37410	46750	56100
66 x 108	114 x 190	15	49.5	19800	29700	29605	49510	59400
72 x 72	114 x 125	15	36	14400	21600	28800	36000	43205
72 x 78	114 x 140	15	39	15650	23400	31200	39000	46810
72 x 84	114 x 150	15	42	16805	25200	33600	42000	50405
72 x 90	114 x 160	15	45	18000	27005	36000	4500	54000
72 x 96	114 x 170	15	48	19200	28800	38400	48000	57600
72 x 102	114 x 180	15	51	20400	30600	40800	51005	61200
72 x 108	114 x 195	15	54	21600	32415	43200	54000	64800

AIR-RITE MANUFACTURING

MODEL: GRH-1, *GRH-2

STANDARD HOOD PRICING

RELIEF HOODS

	12"	16"	20"	24"	28"	32"	36"	40"	44"	48"	52"	56"	60"	64"	68"	72"
12"	446															
16"	466	478														
20"	484	504	522													
24"	500	524	546	566												
28"	516	540	562	600	636											
32"	528	566	606	636	660	684										
36"	548	594	624	660	688	712	792									
40"	580	610	732	764	796	826	862	894								
44"	594	634	752	792	826	856	892	924	958							
48"	620	646	778	812	844	882	924	952	992	1120						
52"	630	664	794	830	874	910	950	986	1026	1228	1432					
56"	644	688	812	860	896	942	978	1018	1226	1274	1482	1536				
60"	688	732	840	876	922	964	1004	1208	1264	1312	1522	1576	1652			
64"	744	792	926	978	1018	1062	1278	1328	1384	1592	1648	1712	1766	2128		
68"	764	812	944	996	1038	1250	1442	1520	1568	1640	1700	1764	1820	2188	2238	
72"	778	920	968	1014	1112	1282	1496	1556	1618	1670	1740	1806	1860	2234	2308	2370
76"	798	934	992	1186	1250	1316	1522	1584	1656	1722	1792	1852	1918	2290	2370	2582
80"	900	950	1144	1208	1272	1350	1568	1632	1696	1760	1844	1906	1974	2420	2644	2716
84"	910	1092	1208	1238	1306	1374	1596	1668	1750	1880	1944	2016	2084	2612	2696	2772
88"	1026	1114	1224	1260	1340	1558	1632	1708	1842	1912	2000	2072	2536	2676	2760	2836
92"	1062	1134	1260	1440	1510	1592	1668	1734	1896	1970	2042	2220	2600	2740	2816	2906
96"	1082	1306	1396	1470	1544	1620	1706	1786	1924	2000	2192	2270	2640	2792	2868	2956

*GRH-2 CONSTRUCTION.....ADD 25%

GALVANIZED CONSTRUCTION.....LIST
ALUMINUM CONSTRUCTION.....LIST x 50%
INSECT SCREEN.....LIST x 10%

HINGED.....1.25
UNDERCOAT.....1.25
FILTER.....1.34
ALUM. I.S.....1.20

AIR-RITE MFG. RESERVES THE RIGHT TO CHANGE
SPECIFICATIONS WITHOUT NOTICE.

GRH-1 Specifications Air-Rite MFG.

Gravity Relief Hood

Throat Size In.	Hood Size In.	Hood Height In.	Throat Area SF	(WG) Pressure Drop					
				Non-Ducted					
				0.036	0.06	0.098	0.135	0.24	0.375
				0.028	0.05	0.075	0.11	0.2	0.295
				(FPM) Velocity					
				300	400	500	600	800	1000
				(CFM) Airflow					
12 x 12	21 x 21	15	1	300	400	500	600	800	1000
12 x 16	21 x 27	15	1.33	395	535	670	800	1050	1330
12 x 18	21 x 30	15	1.5	500	600	750	900	1200	1500
12 x 24	21 x 39	15	2	650	800	1000	1200	1600	2000
12 x 30	21 x 48	15	2.5	750	1000	1250	1500	2000	2500
12 x 32	21 x 51	15	2.67	800	1075	1355	1600	2155	2675
12 x 36	21 x 57	15	3	900	1200	1500	1800	2400	3000
12 x 42	21 x 63	15	3.5	1050	1400	1750	2100	2800	3500
12 x 48	21 x 72	15	4	1200	1600	2000	2400	3200	4000
12 x 54	21 x 81	15	4.5	1350	1800	2250	2700	3600	4500
16 x 16	27 x 27	15	1.78	550	725	900	1075	1425	1775
16 x 18	27 x 30	15	2	600	800	1000	1200	1600	2000
16 x 24	27 x 39	15	2.67	800	1075	1355	1600	2155	2675
16 x 30	27 x 48	15	3.33	1000	1355	1675	2000	2675	3350
16 x 32	27 x 51	15	3.56	1075	1425	1790	2155	2850	3550
16 x 36	27 x 57	15	4	1200	1600	2000	2400	3200	4000
16 x 42	27 x 63	15	4.67	1400	1875	2355	2800	3755	4675
16 x 48	27 x 72	15	5.33	1600	2155	2675	3200	4275	5350
16 x 54	27 x 81	15	6	1800	2400	3000	3600	4800	6000
16 x 60	27 x 90	15	6.67	2000	2675	3355	4000	5355	6675
18 x 18	30 x 30	15	2.25	700	900	1125	1350	1800	2250
18 x 24	30 x 39	15	3	900	1200	1500	1800	2400	3000
18 x 30	30 x 48	15	3.75	1125	1500	1875	2250	3000	3750
18 x 32	30 x 51	15	4	1200	1600	2000	2400	3200	4000
18 x 36	30 x 57	15	4.5	1350	1800	2250	2700	3600	4500
18 x 42	30 x 63	15	5.25	1575	2100	2625	3150	4200	5250
18 x 48	30 x 72	15	6	1800	2400	3000	3600	4800	6000
18 x 54	30 x 81	15	6.75	2025	2700	3375	4050	5400	6750
18 x 60	30 x 90	15	7.5	2250	3000	3750	4500	6000	7500
18 x 66	30 x 92	15	8.25	2475	3300	4125	4950	6600	8250
24 x 24	39 x 39	15	4	1200	1600	2000	2400	3200	4000
24 x 30	39 x 48	15	5	1500	2000	2500	3000	4000	5000
24 x 32	39 x 51	15	5.33	1600	2155	2675	3200	4275	5350
24 x 36	39 x 57	15	6	1800	2400	3000	3600	4800	6000
24 x 42	39 x 63	15	7	2100	2800	3500	4200	5600	7000
24 x 48	39 x 72	15	8	2400	2300	4000	4800	6400	8000
24 x 54	39 x 81	15	9	2700	3600	4500	5400	7200	9000
24 x 60	39 x 90	15	10	3000	4000	5000	6000	8000	10000
24 x 66	39 x 92	15	11	3300	4400	5500	6600	8800	11000
24 x 72	39 x 100	15	12	3600	4800	6000	7200	9600	12000
30 x 30	48 x 48	15	6.25	1875	2500	3125	3750	5000	6250
30 x 32	48 x 51	15	6.67	2000	2675	3350	4000	5350	6675
30 x 36	48 x 57	15	7.5	2250	3000	3750	4500	6000	7500

GRH-1 Specifications Air-Rite MFG.

Gravity Relief Hood

Throat Size In.	Hood Size In.	Hood Height In.	Throat Area SF	(WG) Pressure Drop					
				Non-Ducted					
				0.036	0.06	0.098	0.135	0.24	0.375
				0.028	0.05	0.075	0.11	0.2	0.295
				(FPM) Velocity					
				300	400	500	600	800	1000
				(CFM) Airflow					
30 x 42	48 x 63	15	8.75	2625	3500	4375	5250	7000	8750
30 x 48	48 x 72	15	10	3000	4000	5000	6000	8000	10000
30 x 54	48 x 81	15	11.25	3375	4500	5625	6750	9000	11250
30 x 60	48 x 90	15	12.5	3750	5000	6250	7500	10000	12500
30 x 66	48 x 92	15	13.75	4125	5500	6875	8250	11000	13750
30 x 72	48 x 100	15	15	4500	6000	7500	9000	12000	15000
30 x 78	48 x 109	15	16.25	4875	6500	8125	9750	13000	16250
32 x 32	51 x 51	15	7.11	2150	2850	3550	4275	5700	7125
32 x 36	51 x 57	15	8	2400	3200	4000	4800	6400	8000
32 x 42	51 x 63	15	9.33	2800	3750	4675	5600	7450	9350
32 x 48	51 x 72	15	10.67	3200	4275	5350	6400	8550	10675
32 x 54	51 x 81	15	12	3600	4800	600	7200	9600	12000
32 x 60	51 x 90	15	13.33	4000	5350	6675	8000	10675	13350
32 x 66	51 x 92	15	14.67	4400	5875	7350	8800	11750	14675
32 x 72	51 x 100	15	16	4800	6400	8000	9600	12800	16000
32 x 78	51 x 109	15	17.33	5200	6950	8675	10400	13875	17350
32 x 84	51 x 115	15	18.67	5600	7475	9350	11200	14950	18675
36 x 36	57 x 57	15	9	2700	3600	4500	5400	7200	9000
36 x 42	57 x 63	15	10.5	3150	4200	5250	6300	8400	10500
36 x 48	57 x 72	15	12	3600	4800	6000	7200	9600	12000
36 x 54	57 x 81	15	13.5	4050	5400	6750	8100	10800	13500
36 x 60	57 x 90	15	15	4500	6000	7500	9000	12000	15000
36 x 66	57 x 92	15	16.5	4950	6600	8250	9900	13200	16500
36 x 72	57 x 100	15	18	5400	7200	9000	10800	14400	18000
36 x 78	57 x 109	15	19.5	5850	7800	9750	11700	15600	19500
36 x 84	57 x 115	15	21	6300	8400	10500	12600	16800	21000
36 x 90	57 x 120	15	22.5	6750	9000	11250	13500	18000	22500
42 x 42	63 x 63	15	12.25	3675	4900	6125	7350	9800	12250
42 x 48	63 x 72	15	14	4200	5600	7000	8400	11200	14000
42 x 54	63 x 81	15	15.75	4725	6300	7875	9450	12600	15750
42 x 60	63 x 90	15	17.5	5250	7000	8750	10500	14000	17500
42 x 66	63 x 92	15	19.25	5775	7700	9675	11550	15400	19250
42 x 72	63 x 100	15	21	6300	8400	10500	12600	16800	21000
42 x 78	63 x 109	15	22.75	6825	9100	11375	13600	18200	22750
42 x 84	63 x 115	15	24.5	7350	9800	12250	14700	19600	24500
42 x 90	70 x 120	15	26.25	7875	10500	13125	15750	21000	26250
42 x 96	70 x 125	15	28	8400	11200	14000	16800	22400	28000
48 x 48	72 x 72	15	16	4800	6400	8000	9600	12800	16000
48 x 54	72 x 81	15	18	5400	7200	9000	10800	14400	18000
48 x 60	72 x 90	15	20	6000	8000	10000	12000	16000	20000
48 x 66	72 x 92	15	22	6600	8800	11000	13200	17600	22000
48 x 72	72 x 100	15	24	7200	9600	12000	14400	19200	24000
48 x 78	72 x 109	15	26	7800	10400	13000	15600	20800	23400

GRH-1 Specifications Air-Rite MFG.

Gravity Relief Hood

Throat Size In.	Hood Size In.	Hood Height In.	Throat Area SF	(WG) Pressure Drop					
				Non-Ducted					
				0.036	0.06	0.098	0.135	0.24	0.375
				0.028	0.05	0.075	0.11	0.2	0.295
				(FPM) Velocity					
				300	400	500	600	800	1000
				(CFM) Airflow					
48 x 84	72 x 115	15	28	8400	11200	14000	16800	22400	25200
48 x 90	75 x 125	15	30	9000	12000	15000	18000	24000	27000
48 x 96	75 x 132	15	32	9600	12800	16000	19200	25600	28800
48 x 102	75 x 138	15	34	10200	13600	17000	20400	27200	30600
54 x 54	81 x 81	15	20.25	6075	8100	10150	12100	16200	18200
54 x 60	81 x 90	15	22.5	6750	9000	11250	13500	18000	20250
54 x 66	81 x 92	15	24.75	7425	9900	12375	14800	19800	22300
54 x 72	81 x 100	15	27	8100	10800	13500	16200	21600	24300
54 x 78	81 x 109	15	29.25	8775	11700	14625	17500	23400	26300
54 x 84	81 x 115	15	31.5	9450	12600	15750	18900	25200	28350
54 x 90	83 x 125	15	33.75	10125	13500	16875	20250	27000	30375
54 x 96	83 x 132	15	36	10800	14400	18000	21600	28800	32400
60 x 60	90 x 90	15	25	7500	10000	12500	15000	20222	22500
60 x 66	90 x 92	15	27.5	82580	11000	13750	16500	22000	24750
60 x 72	90 x 100	15	30	9000	12000	15000	18000	24000	27000
60 x 78	90 x 109	15	32.5	9750	13000	16250	19500	26000	29200
60 x 84	90 x 115	15	35	10500	14000	17500	21000	28000	31500
60 x 90	90 x 125	15	37.5	11250	15000	18750	22500	30000	33750
60 x 96	90 x 132	15	40	12000	16000	20000	24000	32000	36000
60 x 102	90 x 140	15	42.5	12750	17000	21250	25500	34000	38250
66 x 66	99 x 99	15	30.25	9075	12100	15125	18100	24200	27255
66 x 72	99 x 102	15	33	9900	13200	16525	19800	26400	29700
66 x 78	99 x 110	15	35.75	10725	14300	17875	21400	28600	32100
66 x 84	99 x 115	15	38.5	11550	15400	19250	23100	30800	34600
66 x 90	99 x 125	15	41.25	12375	16500	20625	24700	32500	37150
66 x 96	99 x 132	15	44	13200	17600	22000	26400	35200	39600
66 x 102	99 x 140	15	46.75	14025	18700	23375	28050	37400	42050
66 x 108	99 x 150	15	49.5	14850	19800	24750	29700	39600	44500
72 x 72	102 x 102	15	36	10800	14400	18000	21600	28800	32400
72 x 78	110 x 110	15	39	11700	15600	19500	23400	31200	35100
72 x 84	110 x 115	15	42	12600	16800	21000	25200	33600	37800
72 x 90	110 x 130	15	45	13500	18000	22500	27000	36000	40500
72 x 96	110 x 135	15	48	14400	19200	24000	28800	38400	43200
72 x 102	110 x 140	15	51	15300	20400	25500	30600	40800	45900
72 x 108	110 x 150	15	54	16200	21600	27000	32400	43200	48600

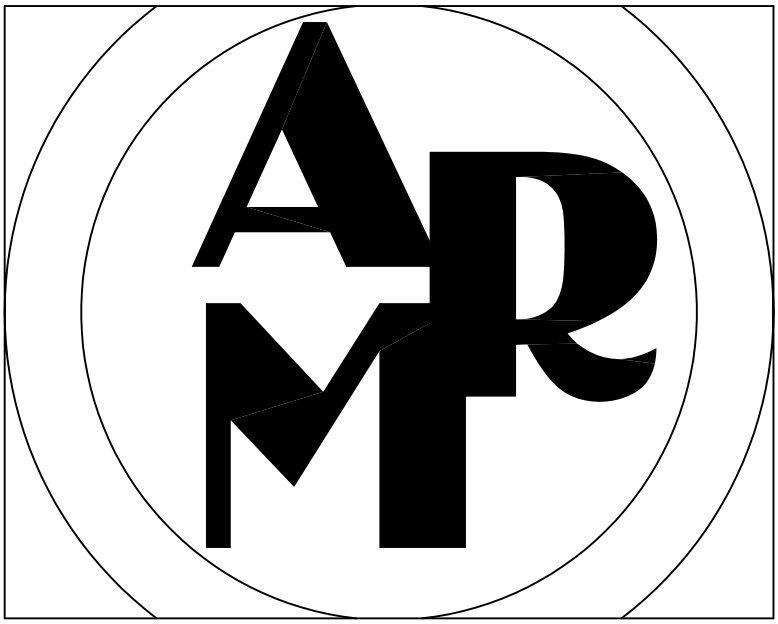

AIR-RITE MANUFACTURING, LLC

SIDE TAKE-OFFS

AIR-RITE MANUFACTURING

SUBMITTAL/FABRICATION DETAIL:
MODEL: **ST-1** HIGH EFFICIENCY SIDE TAKE-OFF

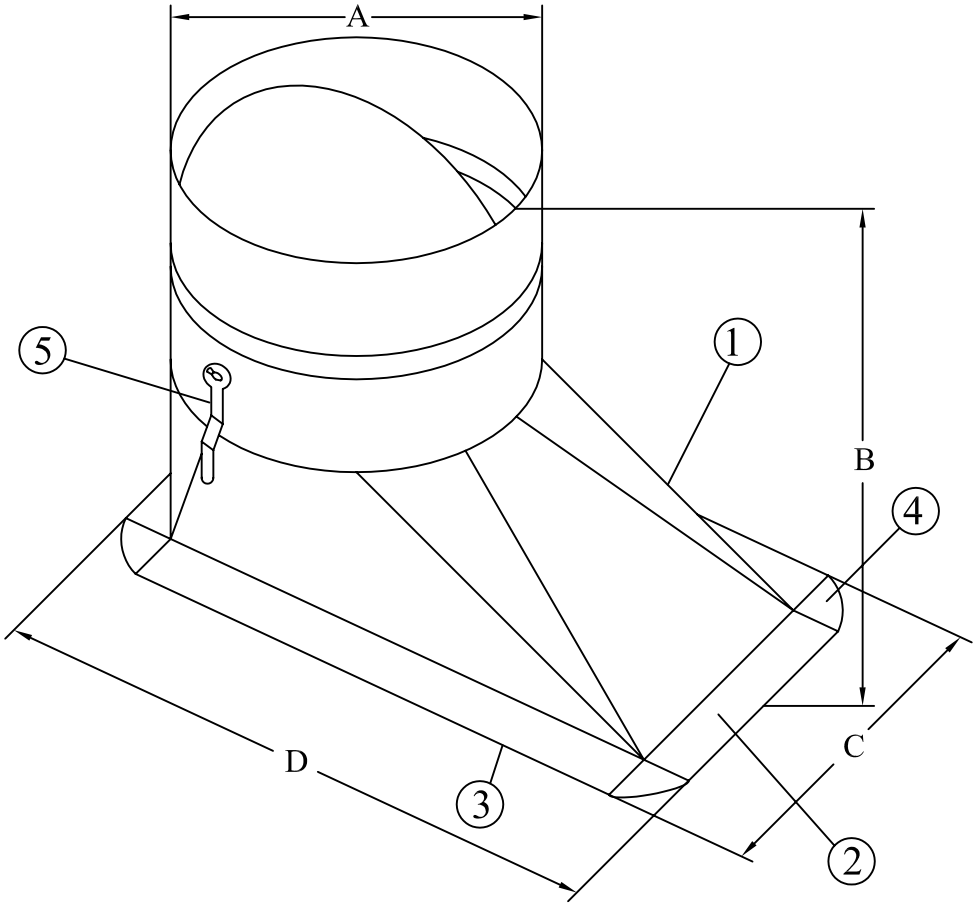

A	B	C	D
6"	10 1/2"	6.75"	12.00"
7"	10 1/2"	7.00"	13.00"
8"	10 1/2"	8.00"	14.00"
9"	10 1/2"	9.00"	15.00"
10"	10 1/2"	10.00"	16.00"
12"	10 1/2"	12.00"	18.00"
14"	10 1/2"	14.00"	20.00"
16"	10 1/2"	16.00"	22.00"
18"	10 1/2"	18.00"	24.00"
20"	10 1/2"	20.00"	26.00"

Count	Size

Standard Construction

(1) -26 ga. galvanized steel construction.

(2) -1" flange for securing to duct.

(3) -Gasket around flange.

(4) -Sealed corner pieces.

(5) -Damper blade regulator.

Optional Construction

☐ -No dampers.
☐ -For spiral pipe (shoe tap).
☐ -Aluminum construction.
☐ -24 ga. body.
☐ -Heavy gauge blade.
☐ -Continuous shaft and bronze end bearings.

Union "Blue Label" Made.

PROJECT NAME:
W/O #:
TAG #:
CONTRACTOR:
SUBMITTED BY:

PAGE: ST-1

AIR-RITE MFG. RESERVES THE RIGHT TO CHANGE SPECIFICATIONS WITHOUT NOTICE.

AIR–RITE MANUFACTURING

SUBMITTAL/FABRICATION DETAIL:
MODEL: **ST-1HD** HD HIGH EFFICIENCY SIDE TAKE-OFF

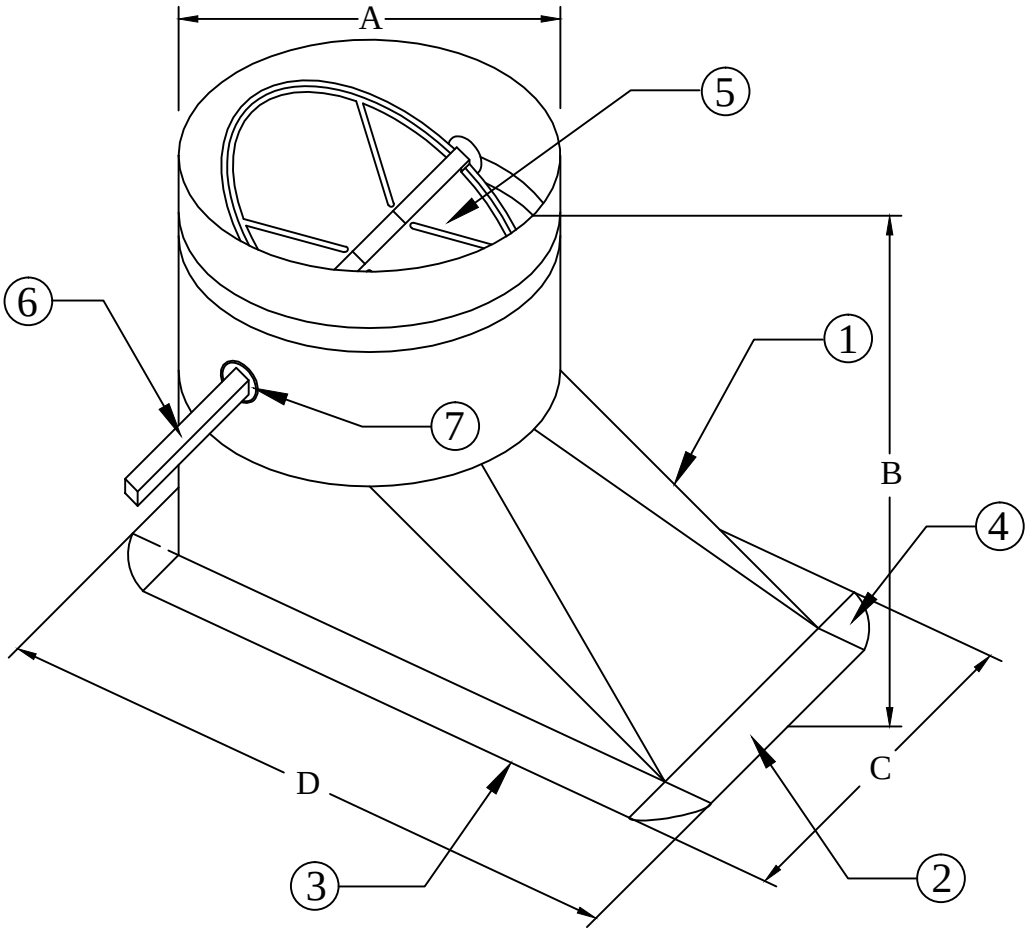

A	B	C	D
6"	10 1/2"	6.00"	14.00"
7"	10 1/2"	7.00"	13.00"
8"	10 1/2"	8.00"	14.00"
9"	10 1/2"	9.00"	15.00"
10"	10 1/2"	9.00"	18.00"
12"	10 1/2"	10.50"	20.00"
14"	10 1/2"	12.00"	22.00"
16"	10 1/2"	14.00"	24.00"
18"	10 1/2"	18.00"	24.00"
20"	10 1/2"	20.00"	26.00"

Standard Construction

① -24 ga. galvanized steel construction.

② -1" flange for securing to duct.

③ -Gasket around flange.

④ -Sealed corner pieces.

⑤ -22 ga. "Stamped" blade.

⑥ -3/8" Square shaft

⑦ -Siliconized rubber bushing. 0% air leakage at +40" w.g.

Optional Construction

☐ -No dampers.

☐ -For spiral pipe (shoe tap).

☐ -Aluminum construction.

☐ -1 ½" Insulation Stand-off mounting bracket.

☐ -Locking Quadrant handle.

-Option 1/2" Round Saft & Bronze Bushing

Count	Size

Union "Blue Label" Made.

PROJECT NAME:	
W/O #:	
TAG #:	
CONTRACTOR:	
SUBMITTED BY:	

PAGE: ST-1HD

AIR-RITE MFG. RESERVES THE RIGHT TO CHANGE SPECIFICATIONS WITHOUT NOTICE.

AIR–RITE MANUFACTURING

SUBMITTAL/FABRICATION DETAIL:
MODEL: **ST-1HDB** HD HIGH EFFICIENCY SIDE TAKE-OFF

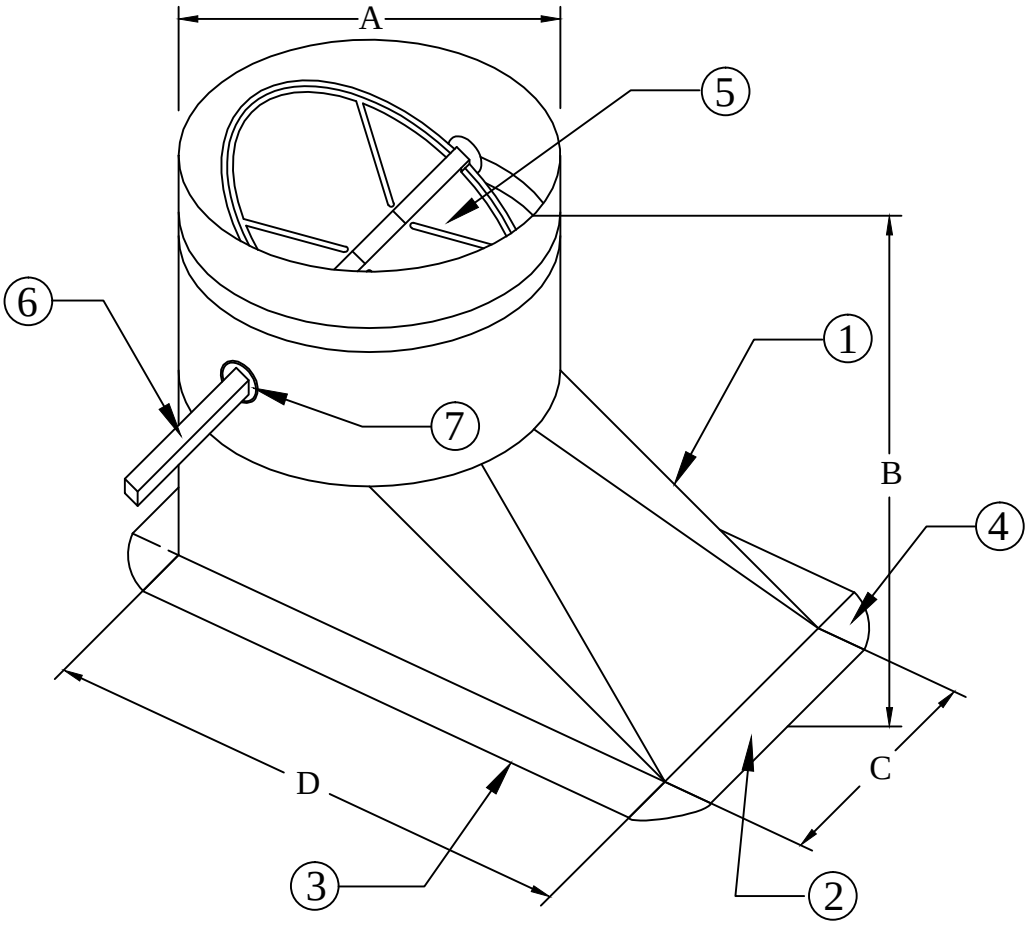

A	B	C	D
6"	10 1/2"	6.00"	12.00"
7"	10 1/2"	7.00"	13.00"
8"	10 1/2"	8.00"	14.00"
9"	10 1/2"	9.00"	15.00"
10"	10 1/2"	10.00"	16.00"
12"	10 1/2"	12.00"	18.00"
14"	10 1/2"	14.00"	22.00"
16"	10 1/2"	16.00"	24.00"
18"	10 1/2"	18.00"	22.00"
20"	10 1/2"	20.00"	24.00"

* Dimension C is Equal To Dimension A

SMACNA CONTRACTOR

Standard Construction

① -24 ga. galvanized steel construction.

② -1" flange for securing to duct.

③ -Gasket around flange.

④ -Sealed corner pieces.

⑤ -22 ga. "Stamped" blade.

⑥ -3/8" Square shaft

⑦-High Pressure Low Leakage Silicone rubber bushing

Optional Construction

☐ -No dampers.
☐ -For spiral pipe (shoe tap).
☐ -Aluminum construction.
☐ -1 ½" Insulation Stand-off mounting bracket.
☐ -Locking Quadrant handle.

Count	Size

Union "Blue Label" Made.

PROJECT NAME:	
W/O #:	
TAG #:	
CONTRACTOR:	
SUBMITTED BY:	

PAGE: ST-1HDB

AIR-RITE MFG. RESERVES THE RIGHT TO CHANGE SPECIFICATIONS WITHOUT NOTICE.

AIR–RITE MANUFACTURING

MODEL: ST-1, ST-1HD,ST-1HDB

SIDE TAKE-OFF PRICING

HIGH EFFICIENCY TAKE-OFF

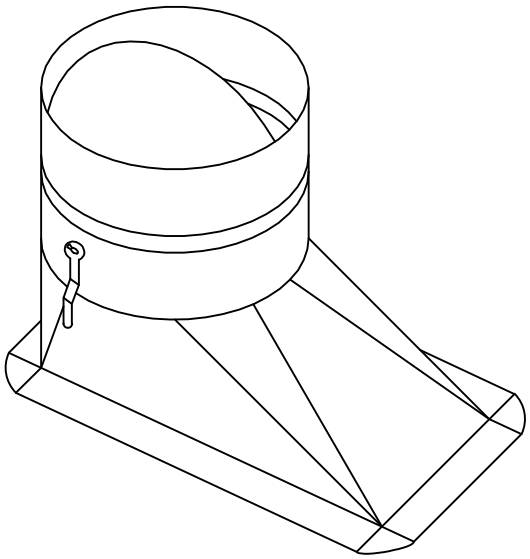

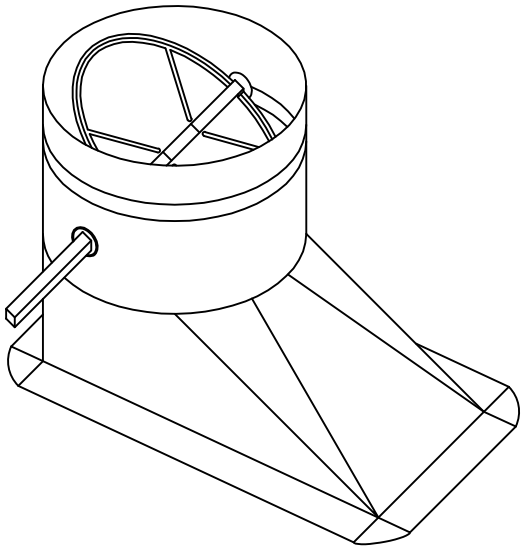

6"Ø	35
8"Ø	40
10"Ø	51
12"Ø	64
14"Ø	80
16"Ø	90
18"Ø	105
20"Ø	220

6"Ø H.D.	67
8"Ø H.D.	72
10"Ø H.D.	78
12"Ø H.D.	84
14"Ø H.D.	90
16"Ø H.D.	108
18"Ø H.D.	126
20"Ø H.D.	150

ST-1HDB ADD	5%
LOCKING QUADRANT HANDLE ADD:	$10.00
1 ½" STAND-OFF ADD:	$10.00
1/2" Rod & Bronze Bushing ADD	25%

AIR-RITE MFG. RESERVES THE RIGHT TO CHANGE SPECIFICATIONS WITHOUT NOTICE.

AIR-RITE MANUFACTURING

SUBMITTAL/FABRICATION DETAIL:
MODEL: **ST-2** SPIN-IN

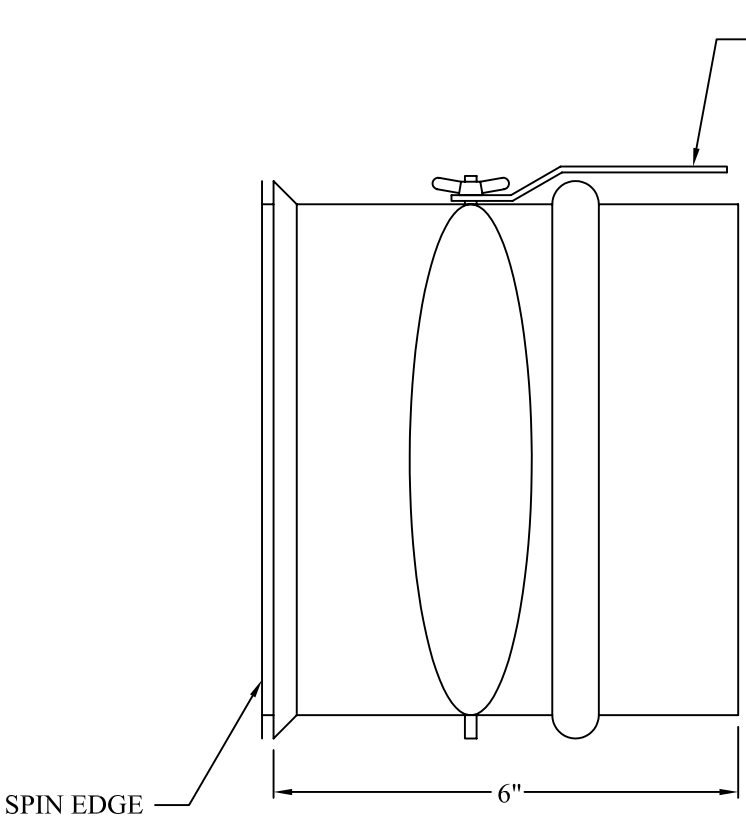

BLADE GAUGE	
DIA.	GAUGE
4 THRU 14	26
15 THRU 26	24
27 THRU 36	22

Count	Size

Union "Blue Label" Made.

Standard Construction

-SMACNA approved gauges on body and blade.
-"Hammer-on" style regulator and end bearings.

Optional Construction

☐ -No dampers.
☐ -Air scoop.
☐ -Dove tail style.

PROJECT NAME:
W/O #:
TAG #:
CONTRACTOR:
SUBMITTED BY:

PAGE: ST-2

AIR-RITE MFG. RESERVES THE RIGHT TO CHANGE SPECIFICATIONS WITHOUT NOTICE.

AIR-RITE MANUFACTURING

SUBMITTAL/FABRICATION DETAIL:
MODEL: **ST-2HD** HEAVY DUTY SPIN-IN

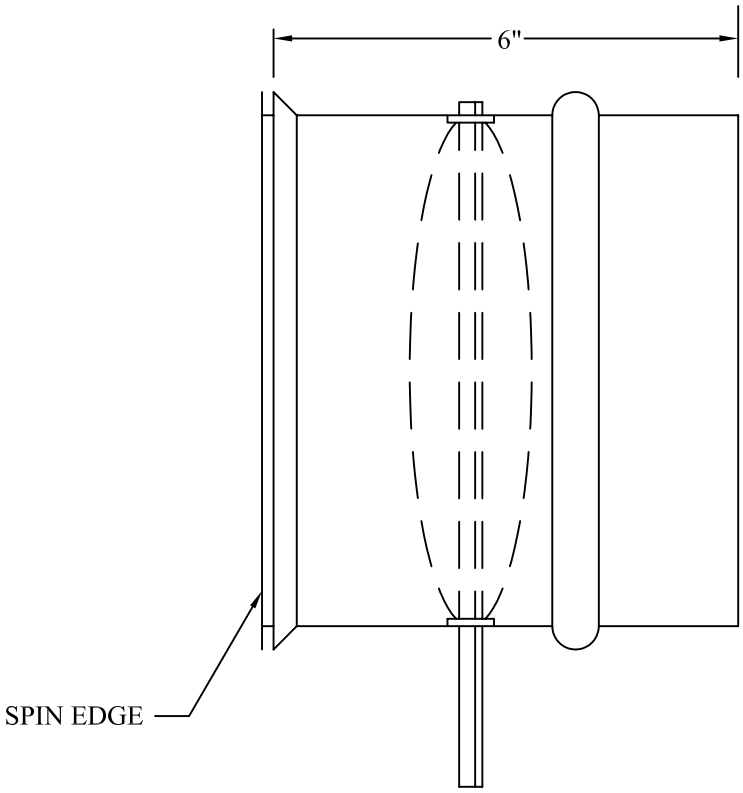

BLADE GAUGE	
DIA.	GAUGE
4 THRU 14	26
15 THRU 26	24
27 THRU 36	22

Count	Size

*** BODY LENGTH VARIES TO ACCOMODATE BLADE. BLADE WILL NOT EXTEND INTO AIR STREAM. ***

Standard Construction

-SMACNA approved gauges on body.
-16 ga. blade.
-Continuous ⅜" square drive shaft.
-16 ga. blade straps and hardware.
-Heavy duty bronze bushings.

Optional Construction

☐ -No dampers.
☐ -Air scoop.
☐ -Dove tail style.
☐ -1" Stand-off insulation bracket.
☐ -Locking Quadrant handle.

Union "Blue Label" Made.

PROJECT NAME:	
W/O #:	
TAG #:	
CONTRACTOR:	
SUBMITTED BY:	

PAGE: ST-2HD

AIR-RITE MFG. RESERVES THE RIGHT TO CHANGE SPECIFICATIONS WITHOUT NOTICE.

AIR-RITE MANUFACTURING

SUBMITTAL/FABRICATION DETAIL:
MODEL: **ST-2HDS** HEAVY DUTY SPIN-IN

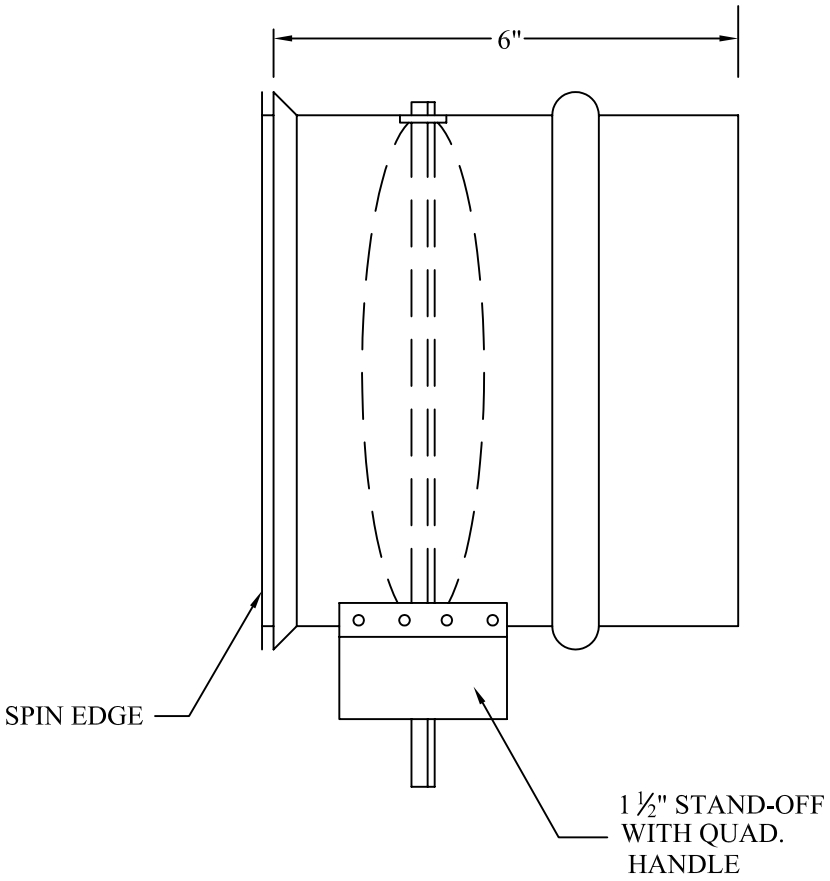

BLADE GAUGE	
DIA.	GAUGE
4 THRU 14	26
15 THRU 26	24
27 THRU 36	22

Count	Size

Standard Construction

-SMACNA approved gauges on body.
-16 ga. blade.
-Continuous ⅜" square drive shaft.
-16 ga. blade straps and hardware.
-Heavy duty nylon bushings.
-1 ½" stand-off w/locking quadrant handle.

Optional Construction

☐ -No dampers.
☐ -Air scoop.
☐ -Dove tail style.

Union "Blue Label" Made.

PROJECT NAME:
W/O #:
TAG #:
CONTRACTOR:
SUBMITTED BY:

PAGE: ST-2HDS

AIR-RITE MFG. RESERVES THE RIGHT TO CHANGE SPECIFICATIONS WITHOUT NOTICE.

AIR-RITE MANUFACTURING

SUBMITTAL/FABRICATION DETAIL:
MODEL: **ST-3** BELL MOUTH SPIN-IN

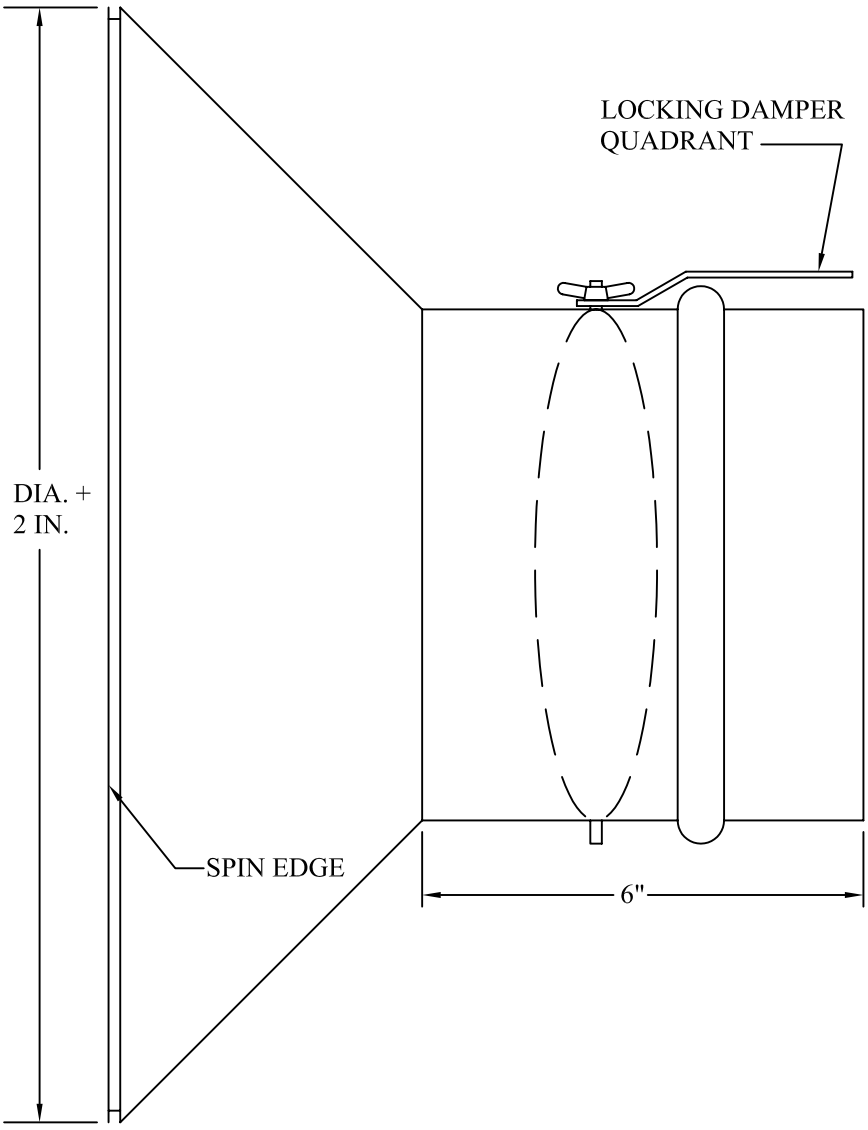

BLADE GAUGE	
DIA.	GAUGE
4 THRU 14	26
15 THRU 26	24
27 THRU 36	22

Count	Size

Standard Construction

-SMACNA approved gauges on body and blade.
-"Hammer-on" style regulator and end bearings.

Optional Construction

☐ -No Dampers.
☐ -Air Scoop.
☐ -Dove Tail Style.

Union "Blue Label" Made.

PROJECT NAME:
ENGINEER:
TAG #:
CONTRACTOR:
SUBMITTED BY:

PAGE: ST-3

AIR-RITE MFG. RESERVES THE RIGHT TO CHANGE SPECIFICATIONS WITHOUT NOTICE.

AIR-RITE MANUFACTURING

SUBMITTAL/FABRICATION DETAIL:
MODEL: **ST-3HDS** HEAVY DUTY BELL MOUNTH SPIN-IN

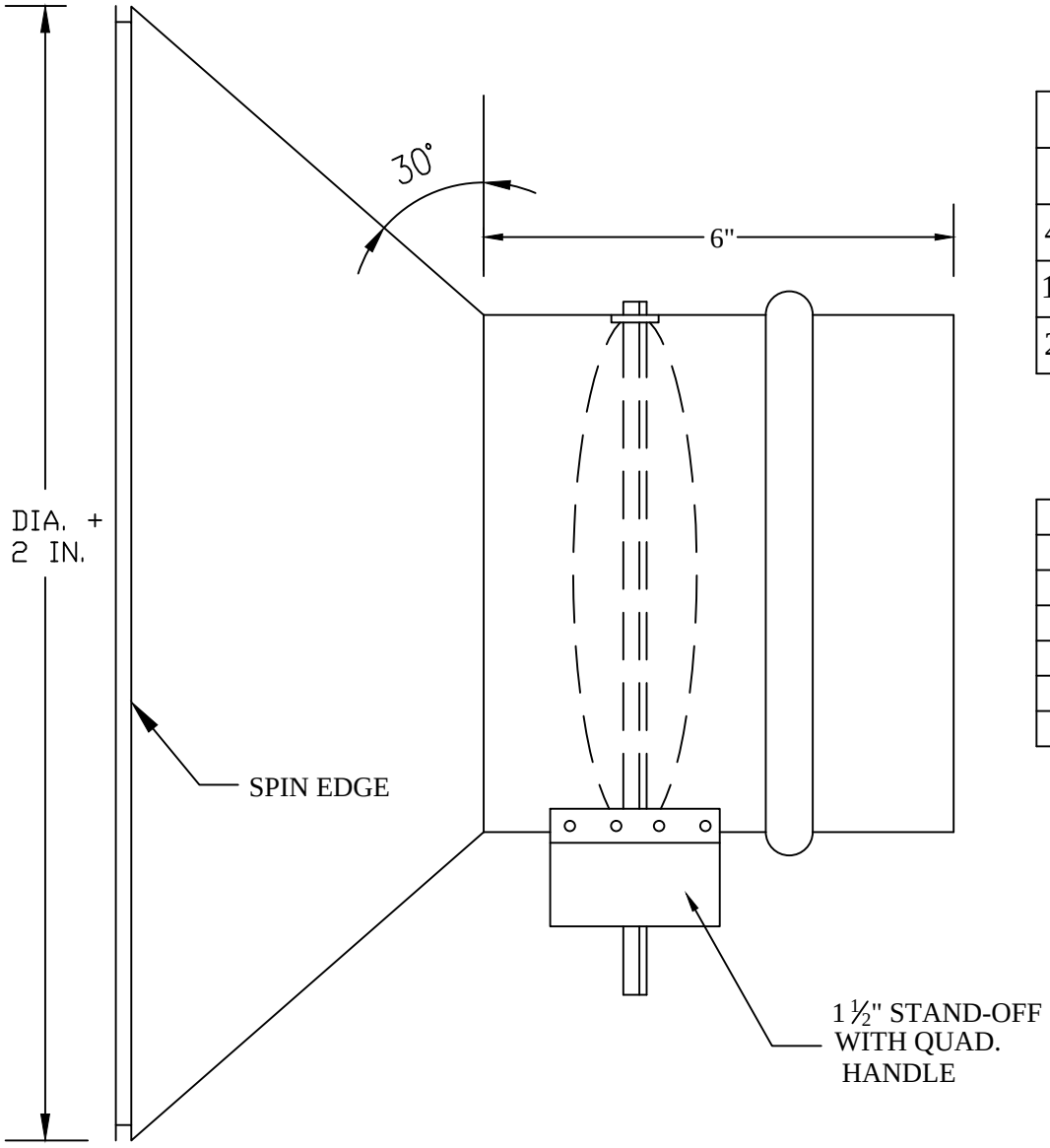

BLADE GAUGE	
DIA.	GAUGE
4 THRU 14	26
15 THRU 26	24
27 THRU 36	22

Count	Size

Standard Construction
- -SMACNA approved gauges on body.
- -16 ga. blade.
- -Continuous ⅜" square drive shaft.
- -16 ga. blade straps and hardware.
- -Heavy duty nylon bushings.
- -1 ½" stand-off w/locking quadrant handle.

Optional Construction
- ☐ -No dampers.
- ☐ -Air scoop.
- ☐ -Dove tail style.

Union "Blue Label" Made.

PROJECT NAME:
W/O #:
TAG #:
CONTRACTOR:
SUBMITTED BY:

PAGE: ST-3HDS

AIR-RITE MFG. RESERVES THE RIGHT TO CHANGE SPECIFICATIONS WITHOUT NOTICE.

AIR-RITE MANUFACTURING

MODEL: ST-2, ST-3

SIDE TAKE-OFF PRICING

SPIN-IN, BELLMOUTH SPIN-IN

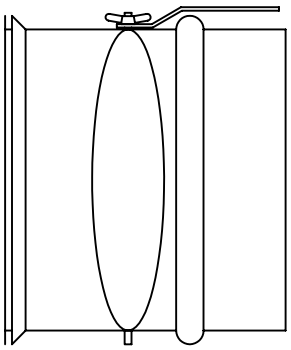

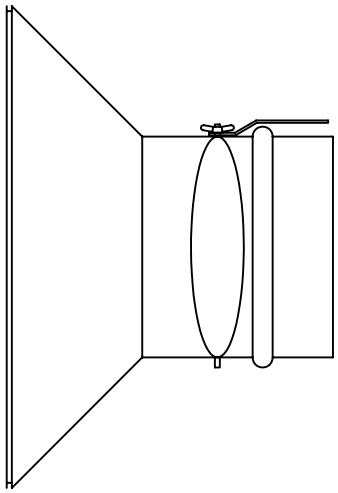

6"Ø	14
8"Ø	16
10"Ø	19
12"Ø	24
14"Ø	27
16"Ø	34
18"Ø	42
20"Ø	47

6"Ø	33
8"Ø	35
10"Ø	43
12"Ø	53
14"Ø	61
16"Ø	75
18"Ø	91
20"Ø	99

FOR ST-2HD CONSTRUCTION ADD TO LIST - $16.00
FOR ST-2HDS CONSTRUCTION ADD TO LIST - $18.50
ALUMINUM CONSTRUCTION ADD - 40%
AIR SCOOP ADD - 20%
DEDUCT FOR NO DAMPER BLADE - 15%

AIR-RITE MFG. RESERVES THE RIGHT TO CHANGE
SPECIFICATIONS WITHOUT NOTICE.

AIR-RITE MANUFACTURING

SUBMITTAL/FABRICATION DETAIL:
MODEL: **ST-4** CONICAL TAP ON ROUND W/DAMPER

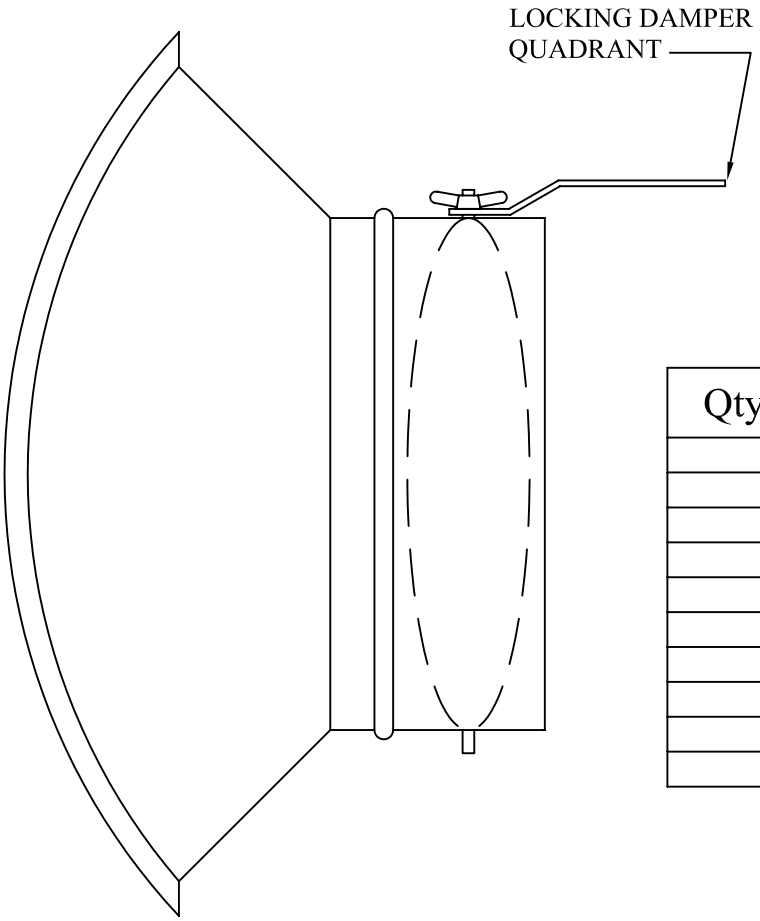

BLADE GAUGE	
DIA.	GAUGE
4 THRU 14	26
15 THRU 26	24
27 THRU 36	22

Qty.	Duct Size	On Ø Size

Standard Construction
- -SMACNA approved gauges on body and blade.
- -"Hammer-on" style regulator and end bearings.

Optional Construction
- ☐ -No Dampers.

Union "Blue Label" Made.

PROJECT NAME:
ENGINEER:
TAG #:
CONTRACTOR:
SUBMITTED BY:

PAGE: ST-4

AIR-RITE MFG. RESERVES THE RIGHT TO CHANGE SPECIFICATIONS WITHOUT NOTICE.

AIR-RITE MANUFACTURING

SUBMITTAL/FABRICATION DETAIL:
MODEL: **ST-5** 45° TAP ON ROUND W/DAMPER

BLADE GAUGE	
DIA.	GAUGE
4 THRU 14	26
15 THRU 26	24
27 THRU 36	22

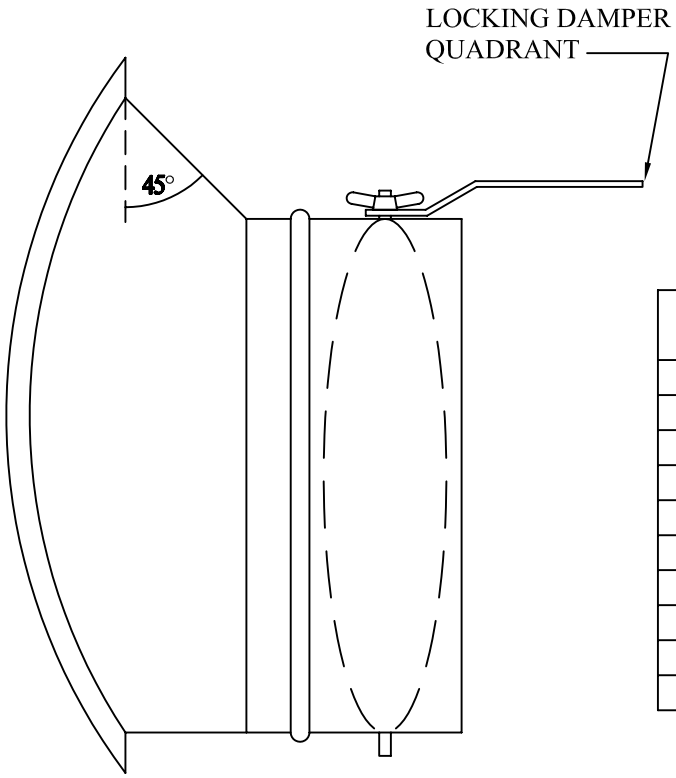

Qty.	Duct Size	On Ø Size

Standard Construction
- -SMACNA approved gauges on body and blade.
- -"Hammer-on" style regulator and end bearings.

Optional Construction
- ☐ -No Dampers.

Union "Blue Label" Made.

PROJECT NAME:
ENGINEER:
TAG #:
CONTRACTOR:
SUBMITTED BY:

PAGE: ST-5

AIR-RITE MFG. RESERVES THE RIGHT TO CHANGE SPECIFICATIONS WITHOUT NOTICE.

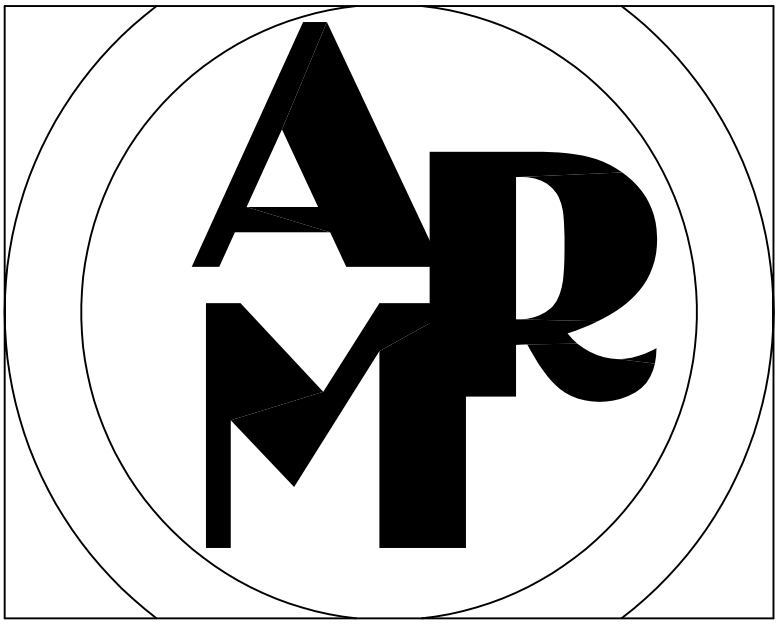

AIR-RITE MANUFACTURING, LLC

ACCESS DOORS

AIR-RITE MANUFACTURING

SUBMITTAL/FABRICATION DETAIL
MODEL: AD-1 DUCT ACCESS DOOR

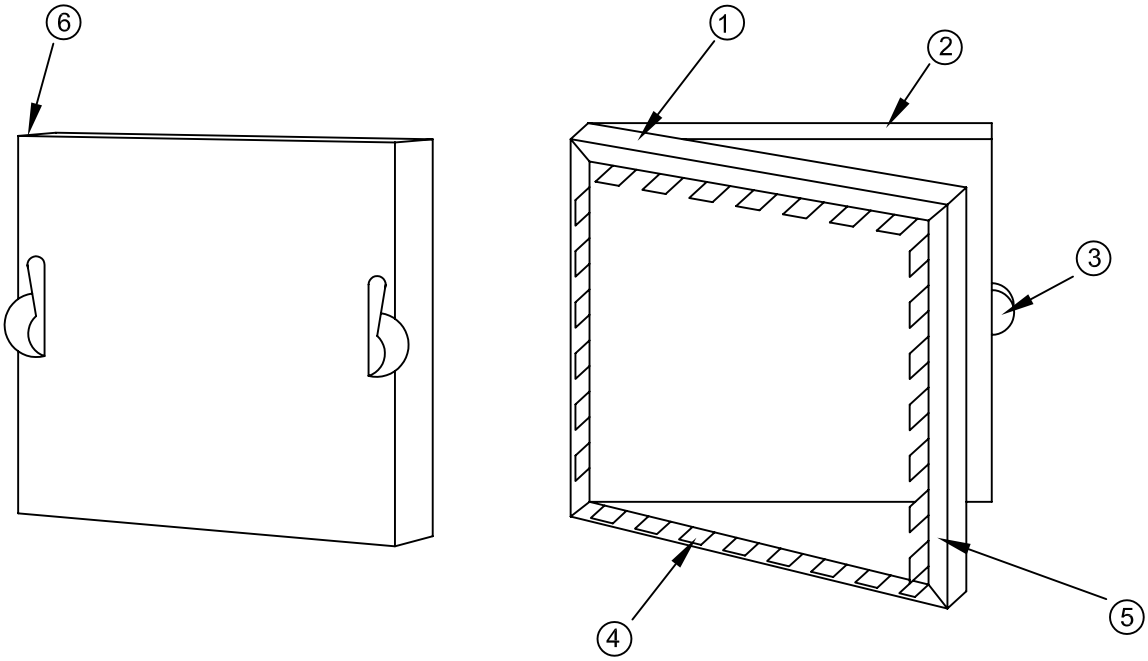

	FRAME SIZE	DOOR SIZE	COUNT
	6 x 6	5 11/16" x 5 11/16"	
	8 x 8	7 11/16" x 7 11/16"	
	10 x 10	9 11/16" x 9 11/16"	
	12 x 12	11 11/16" x 11 11/16"	
	14 x 14	13 11/16" x 13 11/16"	
✳	16 x 16	15 11/16" x 15 11/16"	
✳	18 x 18	17 11/16" x 17 11/16"	
✳	20 x 20	19 11/16" x 19 11/16"	
✳	24 x 24	23 11/16" x 23 11/16"	

✳ DOUBLE CAMLOCKS

Standard Construction

1. -24 ga. Construction
2. -Doors are 1" thick, insulated, and foam sealed.
3. -Cam style lock w/ strike.
4. -"Dove Tail" style knock-overs.
5. -Foam seal against duct work.
6. -Continuous galvanized piano hinge.

Optional Construction:

☐ -Aluminum construction.

☐ -Stainless Steel construction.

Union "Blue Label" Made.

PROJECT NAME:
ENGINEER:
TAG #:
CONTRACTOR:
SUBMITTED BY:

PAGE: AD-1

AIR-RITE MFG. RESERVES THE RIGHT TO CHANGE SPECIFICATIONS WITHOUT NOTICE.

AIR-RITE MANUFACTURING

SUBMITTAL/FABRICATION DETAIL
MODEL: HAD-2 HINGED DUCT ACCESS DOOR

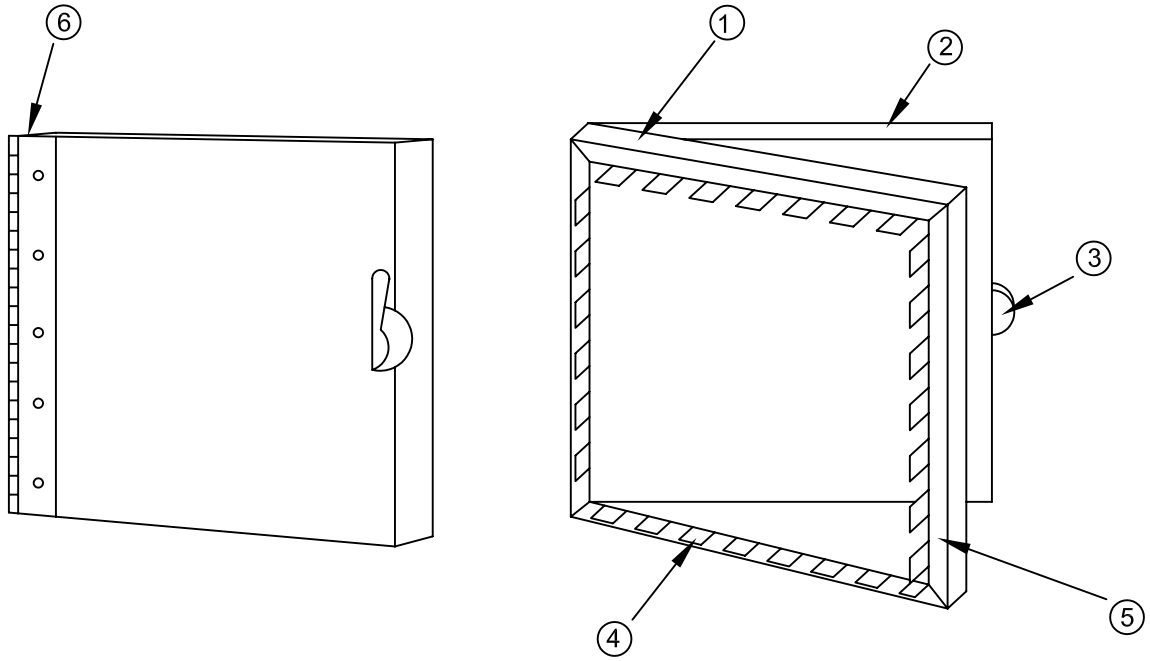

	FRAME SIZE	DOOR SIZE	COUNT
	6 x 6	5 11/16" x 5 11/16"	
	8 x 8	7 11/16" x 7 11/16"	
	10 x 10	9 11/16" x 9 11/16"	
	12 x 12	11 11/16" x 11 11/16"	
	14 x 14	13 11/16" x 13 11/16"	
✳	16 x 16	15 11/16" x 15 11/16"	
✳	18 x 18	17 11/16" x 17 11/16"	
✳	20 x 20	19 11/16" x 19 11/16"	
✳	24 x 24	23 11/16" x 23 11/16"	

✳ DOUBLE CAMLOCKS

Standard Construction

1. -24 ga. Construction
2. -Doors are 1" thick, insulated, and foam sealed.
3. -Cam style lock w/ strike.
4. -"Dove Tail" style knock-overs.
5. -Foam seal against duct work.
6. -Continuous galvanized piano hinge.

Optional Construction:

☐ -Aluminum construction.

☐ -Stainless Steel construction.

Union "Blue Label" Made.

PROJECT NAME:	
W/O #:	
TAG #:	
CONTRACTOR:	
SUBMITTED BY:	

PAGE: HAD-2

AIR-RITE MFG. RESERVES THE RIGHT TO CHANGE SPECIFICATIONS WITHOUT NOTICE.

AIR–RITE MANUFACTURING

SUBMITTAL/FABRICATION DETAIL
MODEL: **AD-3** Round DUCT ACCESS DOOR

Round access doors are used to provide a more effective easy access area into round ductwork that requires no frame to install

Features:

- Meets 2005 SMACNA for pressure class & gauges

-Service temperature range of 20* F to 200*F

-Tested up to 20W.G. and negative 10W.G.

Standard Construction

-24 gauge ASTM A-653 G60 Construction

- Closed cell frame bonded neoprene gasket

- Zinc-plated Steel Springs

- Polypropylene molded knobs with threaded metal inserts

- Zinc-plated Steel Bolts.

- 10"x6" size made to fit round ductwork 10" to 76"

Optional Construction:

-Aluminum construction.

-Stainless Steel construction.

Union "Blue Label" Made.

PROJECT NAME:
ENGINEER:
TAG #:
CONTRACTOR:
SUBMITTED BY:

PAGE: AD-3

AIR-RITE MFG. RESERVES THE RIGHT TO CHANGE SPECIFICATIONS WITHOUT NOTICE.

AIR–RITE MANUFACTURING

MODEL: AD-1, AD-3, HAD-2

DUCT ACCESS DOOR PRICING

NON-HINGED ACCESS DOOR, ROUND ACCESS DOOR, & HINGED ACCESS DOORS

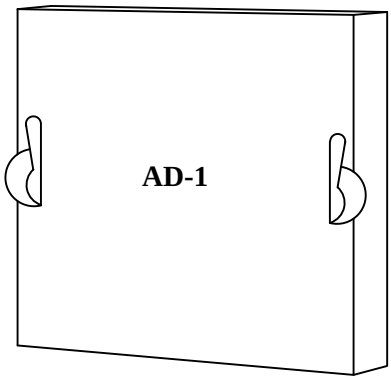

AD-3

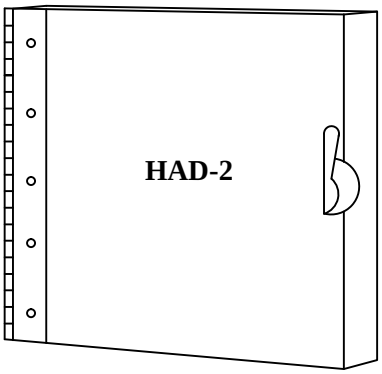

6"x6"	32.00
8"x8"	34.00
10"x10"	40.00
12"x12"	44.00
14"x14"	54.00
16"x16"	64.00
18"x18"	72.00
20"x20"	80.00
24"x24"	98.00

5" - 12"	60.00
14" - 16"	80.00
18" - 24 "	110.00
28" - 30"	130.00
32" or Larger	Consult Factory

6"x6"	34.50
8"x8"	36.50
10"x10"	42.50
12"x12"	46.50
14"x14"	57.00
16"x16"	67.00
18"x18"	77.00
20"x20"	85.00
24"x24"	103.00

ALUMINUM CONSTRUCTION ADD - Consult factory for price & availability

STAINLESS STEEL CONSTRUCTION ADD - Consult factory for price & availability

AIR-RITE MFG. RESERVES THE RIGHT TO CHANGE SPECIFICATIONS WITHOUT NOTICE.

AIR-RITE MANUFACTURING

SUBMITTAL/FABRICATION DETAIL
MODEL: HAD-3 ROUND DUCT HINGED ACCESS DOOR

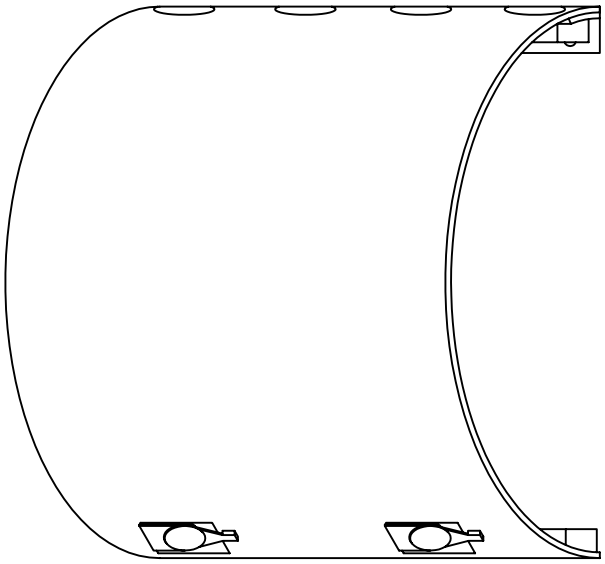

DUCT SIZE	QTY.
6"Ø	
8"Ø	
10"Ø	
12"Ø	
14"Ø	
16"Ø	
18"Ø	
20"Ø	
24"Ø	

Standard Construction

1. -24 ga. Construction.
2. -Doors are foam sealed.
3. -Cam style lock w/ strike.
4. -Continuous galvanized piano hinge.

Optional Construction:

- ☐ -Aluminum construction.
- ☐ -Stainless Steel construction.

Union "Blue Label" Made.

PROJECT NAME:
ENGINEER:
TAG #:
CONTRACTOR:
SUBMITTED BY:

PAGE: HAD-3

AIR-RITE MFG. RESERVES THE RIGHT TO CHANGE SPECIFICATIONS WITHOUT NOTICE.

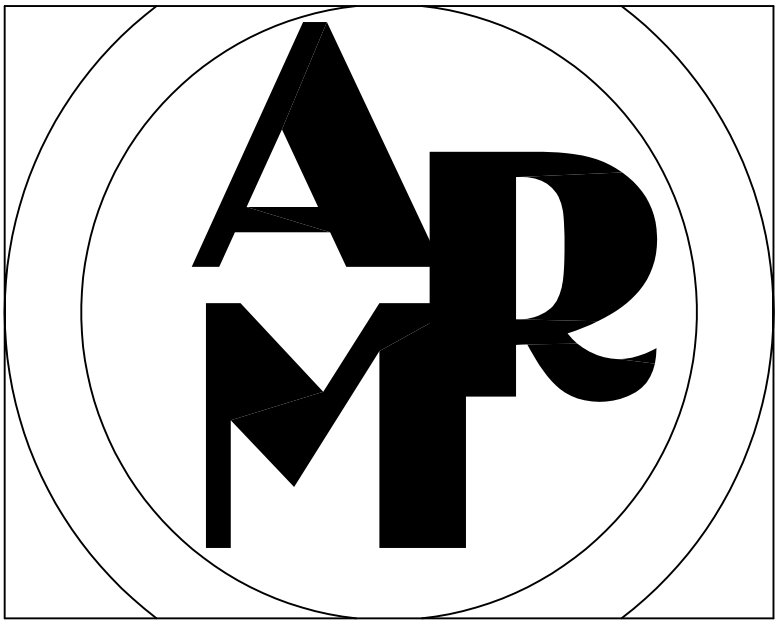

AIR-RITE MANUFACTURING, LLC

LOUVERS

AIR-RITE MANUFACTURING

SUBMITTAL/FABRICATION DETAIL:
MODEL: L-1 FORMED LOUVER

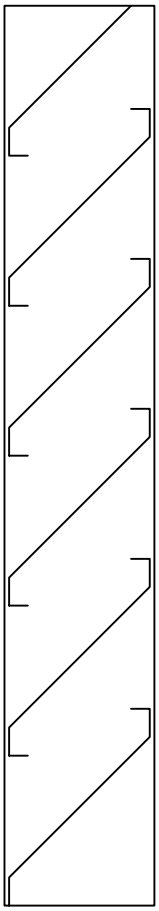

STANDARD CONSTRUCTION

1. FRAMES -- 20 GA. GALVANIZED STEEL FORMED 2", 4" OR 6" DEEP. (4" STANDARD)

2. BLADES -- 20 GA. GALVANIZED STEEL AFFIXED TO FRAMES. (AVAIL. IN 30° OR 45°)

3. BIRDSCREEN -- ½" WIRE MESH SECURED TO BACK OF LOUVER BETWEEN BLADES AND FRAMES.

FRAME STYLES

1 - FLANGE (1 ½" WIDE)
2 - CHANNEL (¾" x 4")
3 - BOX (1 ½" x 4")

1

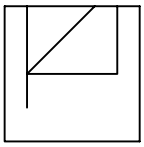

2

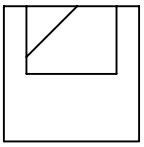

3

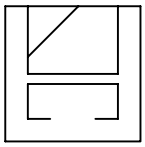

4" BLADE SPACING.

MINIMUM HEIGHT = 8".

MAXIMUM ONE PIECE PANEL CONSTRUCTION = 48" x 120".

LARGER SIZES FURNISHED IN SECTIONS.

QTY.	SIZE	
	A	B

Union "Blue Label" Made.

PROJECT NAME:
W/O #:
TAG #:
CONTRACTOR:
SUBMITTED BY:

PAGE: L-1

AIR-RITE MFG. RESERVES THE RIGHT TO CHANGE SPECIFICATIONS WITHOUT NOTICE.

AIR-RITE MANUFACTURING

SUBMITTAL/FABRICATION DETAIL: FORMED LOUVER
MODEL: L-1P (PITCHED LOUVER)

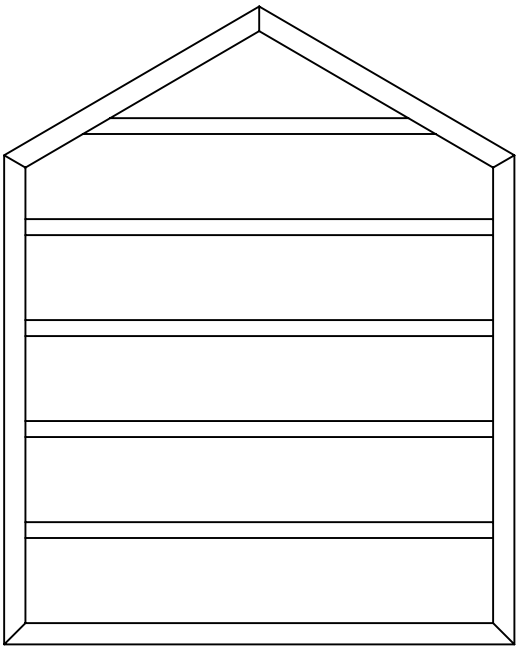

STANDARD CONSTRUCTION

1. FRAMES -- 20 GA. GALVANIZED STEEL FORMED 2", 4" OR 6" DEEP. (4" STANDARD)

2. BLADES -- 20 GA. GALVANIZED STEEL AFFIXED TO FRAMES. (AVAIL. IN 30° OR 45°)

3. BIRDSCREEN -- ½" WIRE MESH SECURED TO BACK OF LOUVER BETWEEN BLADES AND FRAMES.

4" BLADE SPACING.

MINIMUM HEIGHT = 8".

MAXIMUM ONE PIECE PANEL CONSTRUCTION = 48" x 120".

LARGER SIZES FURNISHED IN SECTIONS.

FRAME STYLES

1 - FLANGE (1 ½" WIDE)
2 - CHANNEL (¾" x 4")

1

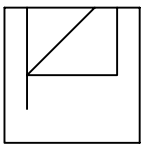

2

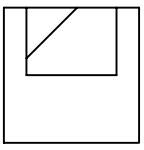

QTY.	SIZE		PITCH
	A	B	

Union "Blue Label" Made.

PROJECT NAME:
ENGINEER:
TAG #:
CONTRACTOR:
SUBMITTED BY:

PAGE: L-1P

AIR-RITE MFG. RESERVES THE RIGHT TO CHANGE SPECIFICATIONS WITHOUT NOTICE.

AIR-RITE MANUFACTURING

SUBMITTAL/FABRICATION DETAIL:
MODEL: L-2 FORMED LOUVER

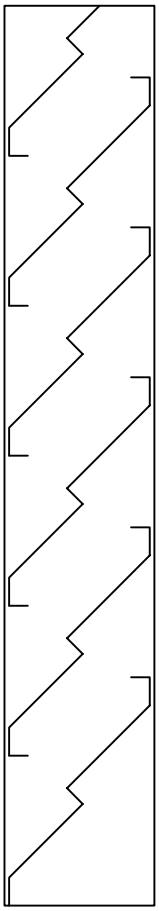

STANDARD CONSTRUCTION

1. FRAMES -- 20 GA. GALVANIZED STEEL FORMED 2", 4" OR 6" DEEP. (4" STANDARD)

2. BLADES -- 20 GA. GALVANIZED STEEL AFFIXED TO FRAMES. (AVAIL. IN 30° OR 45°)

3. BIRDSCREEN -- ½" WIRE MESH SECURED TO BACK OF LOUVER BETWEEN BLADES AND FRAMES.

FRAME STYLES

1 - FLANGE (1 ½" WIDE)
2 - CHANNEL (¾" x 4")
3 - BOX (1 ½" x 4")

1

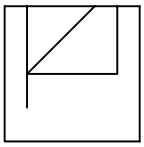

2

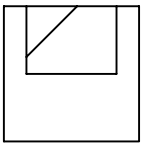

3

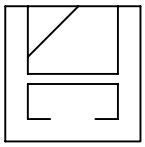

4" BLADE SPACING.

MINIMUM HEIGHT = 8".

MAXIMUM ONE PIECE PANEL CONSTRUCTION = 48" x 120".

LARGER SIZES FURNISHED IN SECTIONS.

QTY.	SIZE	
	A	B

Union "Blue Label" Made.

PROJECT NAME:
W/O #:
TAG #:
CONTRACTOR:
SUBMITTED BY:

PAGE: L-2

AIR-RITE MFG. RESERVES THE RIGHT TO CHANGE SPECIFICATIONS WITHOUT NOTICE.

AIR-RITE MANUFACTURING

MODEL: L-1, L-2

STANDARD LOUVER PRICING

FORMED LOUVERS

	12	18	24	30	36	42	48	54	60	66	72	78	84	90	96
12	90	96	102	108	114	124	130	136	142	148	154	166	172	176	184
18	108	114	124	132	142	150	156	168	178	186	196	202	210	220	228
24	138	150	166	174	186	198	210	222	234	250	262	274	286	298	310
30	154	172	186	198	214	226	244	258	270	282	298	312	328	342	354
36	190	204	222	244	258	276	294	310	330	348	364	382	402	418	436
42	204	226	246	264	286	304	324	346	364	382	402	424	442	460	484
48	222	246	268	288	310	334	354	376	400	420	442	462	486	504	526
54	256	280	304	330	358	382	408	432	456	484	508	532	558	582	606
60	274	300	328	354	380	412	436	462	492	516	544	574	598	624	654
66	292	322	348	378	408	436	466	496	530	556	582	612	642	670	700
72	324	354	388	420	454	486	520	552	586	616	648	682	714	748	778
78	342	378	412	444	480	514	546	582	616	654	688	724	756	792	826
84	358	396	432	468	504	540	580	616	652	688	726	762	798	834	874
90	388	430	468	510	552	592	634	670	712	750	792	832	874	912	952
96	408	450	492	534	576	618	660	702	744	790	828	874	912	958	996

BASE MULTIPLIERS

L-1 2" DEEP 1.38
L-1 4" DEEP 1.00
L-1 6" DEEP 1.80
L-2 2" DEEP 1.77
L-2 4" DEEP 1.18
L-2 6" DEEP 1.20

FRAME STYLE MULTIPLIERS

1- .18 FLANGE
2- .00 CHANNEL
3- .03 BOX

BLADE GUAGE MULTIPLIERS

20 GUAGE GALVANIZED .00
18 GUAGE GALVANIZED .14
16 GUAGE GALVANIZED .24

ALUMINUM CONSTRUCTION - 1.40

AIR-RITE MFG. RESERVES THE RIGHT TO CHANGE
SPECIFICATIONS WITHOUT NOTICE.

AIR-RITE MANUFACTURING

SUBMITTAL/FABRICATION DETAIL:
MODEL: L-3 LOUVER WITH EXHAUST BLADE

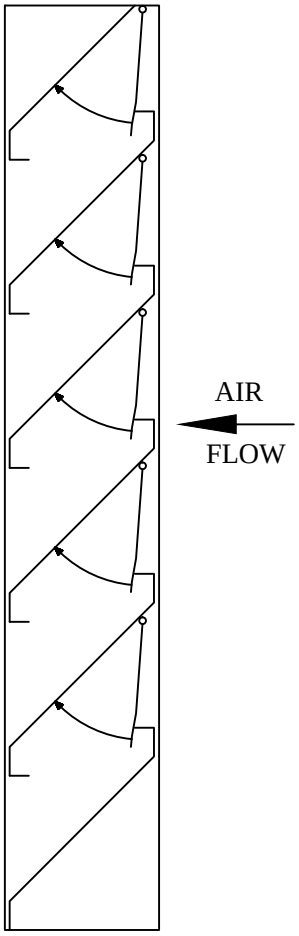

STANDARD CONSTRUCTION

1. FRAMES -- 20 GA. GALVANIZED STEEL FORMED 2", 4" OR 6" DEEP. (4" STANDARD)

2. BLADES -- 20 GA. GALVANIZED STEEL AFFIXED TO FRAMES. (AVAIL. IN 30° OR 45°)

3. BIRDSCREEN -- ½" WIRE MESH SECURED TO BACK OF LOUVER BETWEEN BLADES AND FRAMES.

4. EXHAUST BLADES -- .025 ALUMINUM WITH 12 GA. WIRE AXLES.

FRAME STYLES

1 - FLANGE (1 ½" WIDE)
2 - CHANNEL (¾" x 4")
3 - BOX (1 ½" x 4")

1 2 3

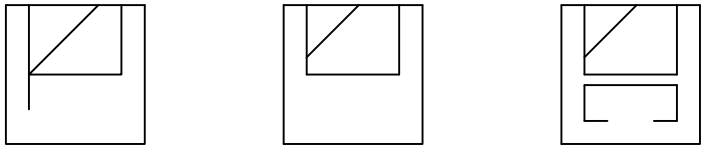

4" BLADE SPACING.

MINIMUM HEIGHT = 8".

MAXIMUM ONE PANEL WIDTH = 48".

LARGER SIZES FURNISHED IN SECTIONS.

QTY.	SIZE	
	A	B

Union "Blue Label" Made.

PROJECT NAME:	
ENGINEER:	
TAG #:	
CONTRACTOR:	
SUBMITTED BY:	

PAGE: L-3

AIR-RITE MFG. RESERVES THE RIGHT TO CHANGE SPECIFICATIONS WITHOUT NOTICE.

AIR–RITE MANUFACTURING

MODEL: L-3

STANDARD LOUVER PRICING

FORMED LOUVER WITH EXHAUST BLADE

	12	18	24	30	36	42	48	54	60	66	72	78	84	90	96
12	90	96	102	108	114	124	130	136	142	148	154	166	172	176	184
18	108	114	124	132	142	150	156	168	178	186	196	202	210	220	228
24	138	150	166	174	186	198	210	222	234	250	262	274	286	298	310
30	144	172	186	198	214	226	244	258	270	282	298	312	328	342	354
36	190	204	222	244	258	276	294	310	330	348	364	382	402	418	436
42	204	226	246	264	286	304	324	346	364	382	402	424	442	460	484
48	222	246	268	288	310	334	354	376	400	420	442	462	486	504	526
54	256	280	304	330	358	382	408	432	456	484	504	532	558	582	606
60	274	300	328	354	380	412	436	462	492	516	544	574	598	624	654
66	292	322	348	378	408	436	466	496	530	556	582	612	642	670	700
72	324	354	388	420	454	486	520	552	586	616	648	682	714	748	778
78	342	378	412	444	480	514	546	582	616	654	688	724	756	792	826
84	358	396	432	468	504	540	580	616	652	688	726	762	798	834	874
90	388	430	468	510	552	592	634	670	712	750	792	832	874	912	952
96	408	450	492	534	576	618	660	702	744	790	828	874	912	958	996

BASE MULTIPLIERS

L-3 4" DEEP 1.00

FRAME STYLE MULTIPLIERS

1- .18 FLANGE
2- .00 CHANNEL

BLADE GUAGE MULTIPLIERS

20 GUAGE GALVANIZED .00
18 GUAGE GALVANIZED .14
16 GUAGE GALVANIZED .24

ALL ALUMINUM CONSTRUCTION - 1.40

AIR-RITE MFG. RESERVES THE RIGHT TO CHANGE SPECIFICATIONS WITHOUT NOTICE.

AIR-RITE MANUFACTURING

SUBMITTAL/FABRICATION DETAIL:
MODEL: L-4 LOUVER WITH INTAKE BLADE

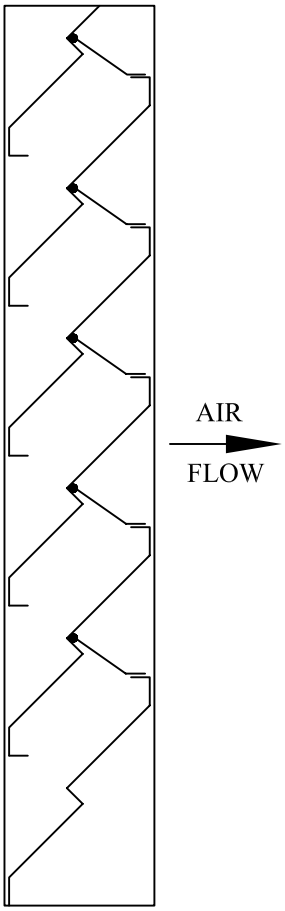

STANDARD CONSTRUCTION

1. FRAMES -- 20 GA. GALVANIZED STEEL FORMED 2", 4" OR 6" DEEP. (4" STANDARD)

2. BLADES -- 20 GA. GALVANIZED STEEL AFFIXED TO FRAMES. (AVAIL. IN 30° OR 45°)

3. BIRDSCREEN -- ½" WIRE MESH SECURED TO BACK OF LOUVER BETWEEN BLADES AND FRAMES.

4. EXHAUST BLADES -- .025 ALUMINUM WITH 12 GA. WIRE AXLES.

FRAME STYLES

1 - FLANGE (1 ½" WIDE)
2 - CHANNEL (¾" x 4")
3 - BOX (1 ½" x 4")

1 2 3

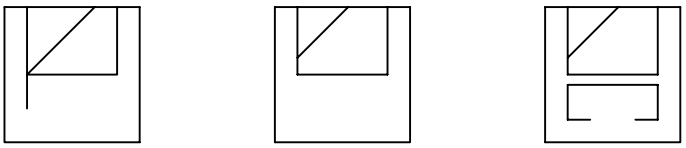

4" BLADE SPACING.

45° BLADE

MINIMUM HEIGHT = 8".

MAXIMUM ONE PANEL WIDTH = 48".

LARGER SIZES FURNISHED IN SECTIONS.

QTY.	SIZE	
	A	B

Union "Blue Label" Made.

PROJECT NAME:	
ENGINEER:	
TAG #:	
CONTRACTOR:	
SUBMITTED BY:	

AIR-RITE MFG. RESERVES THE RIGHT TO CHANGE SPECIFICATIONS WITHOUT NOTICE.

AIR–RITE MANUFACTURING

MODEL: L-4

STANDARD LOUVER PRICING

FORMED LOUVER WITH INTAKE BLADE

	12	18	24	30	36	42	48	54	60	66	72	78	84	90	96
12	90	96	102	108	114	124	130	136	142	148	154	166	172	176	184
18	108	114	124	132	142	150	156	168	178	186	196	202	210	220	228
24	138	150	166	176	186	198	210	222	234	250	262	274	286	298	310
30	154	172	186	198	214	226	244	258	270	282	298	312	328	342	354
36	190	204	222	244	258	276	294	310	330	348	364	382	402	418	436
42	204	226	246	264	286	304	324	346	364	382	402	424	442	460	484
48	222	246	268	288	310	334	354	376	400	420	442	462	486	504	526
54	256	280	304	330	358	382	408	432	456	484	508	532	558	582	606
60	274	300	328	354	380	412	436	462	492	516	544	574	598	624	654
66	292	322	348	378	408	436	466	496	530	556	582	612	642	670	700
72	324	354	388	420	454	486	520	552	586	616	648	682	714	748	778
78	342	378	412	444	480	514	546	582	616	654	688	724	756	792	826
84	358	396	432	468	504	540	580	616	652	688	726	762	798	834	874
90	388	430	468	510	552	592	634	670	712	750	792	832	874	912	952
96	408	450	492	534	576	618	660	702	744	790	828	874	912	958	996

BASE MULTIPLIERS

L-4 4" DEEP 1.00

FRAME STYLE MULTIPLIERS

1- .18 FLANGE
2- .00 CHANNEL

BLADE GUAGE MULTIPLIERS

20 GUAGE GALVANIZED .00
18 GUAGE GALVANIZED .14
16 GUAGE GALVANIZED .24

ALL ALUMINUM CONSTRUCTION - 1.40

AIR-RITE MFG. RESERVES THE RIGHT TO CHANGE SPECIFICATIONS WITHOUT NOTICE.

AIR-RITE MANUFACTURING

SUBMITTAL/FABRICATION DETAIL:
MODEL: L-5 DRAINABLE LOUVER

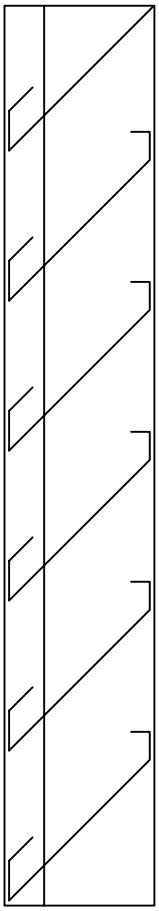

STANDARD CONSTRUCTION

1. FRAMES -- 20 GA. GALVANIZED STEEL FORMED 2", 4" OR 6" DEEP. (4" STANDARD)

2. BLADES -- 20 GA. GALVANIZED STEEL AFFIXED TO FRAMES. (AVAIL. IN 30° OR 45°)

3. BIRDSCREEN -- ½" WIRE MESH SECURED TO BACK OF LOUVER BETWEEN BLADES AND FRAMES.

FRAME STYLES

1 - FLANGE (1 ½" WIDE)
2 - CHANNEL (¾" x 4")
3 - BOX (1 ½" x 4")

1

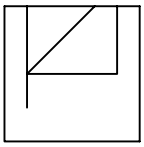

2

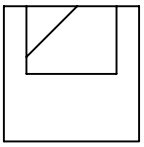

3

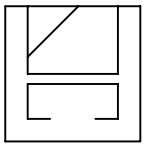

4" BLADE SPACING.

MINIMUM HEIGHT = 8".

MAXIMUM ONE PIECE PANEL CONSTRUCTION = 48" x 120".

LARGER SIZES FURNISHED IN SECTIONS.

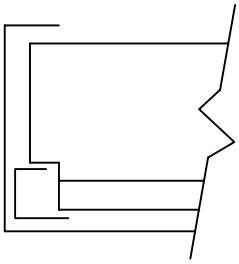

JAMB GUTTER VIEW

QTY.	SIZE	
	A	B

Union "Blue Label" Made.

PROJECT NAME:	
W/O #:	
TAG #:	
CONTRACTOR:	
SUBMITTED BY:	

AIR-RITE MFG. RESERVES THE RIGHT TO CHANGE SPECIFICATIONS WITHOUT NOTICE.

AIR–RITE MANUFACTURING

MODEL: L-5

STANDARD LOUVER PRICING

FORMED LOUVER WITH DRAINABLE BLADES

	12	18	24	30	36	42	48	54	60	66	72	78	84	90	96
12	90	96	102	108	114	124	130	136	142	148	154	166	172	176	184
18	108	114	124	132	142	150	156	168	178	186	196	202	210	220	228
24	138	150	166	176	186	198	210	222	234	250	262	274	286	298	310
30	154	172	186	198	214	226	244	258	270	282	298	312	328	342	354
36	190	204	222	244	258	276	294	310	330	348	364	382	402	418	436
42	204	226	246	264	286	304	324	346	364	382	402	424	442	460	484
48	222	246	268	288	310	334	354	376	400	420	442	462	486	504	526
54	256	280	304	330	358	382	408	432	456	484	508	532	558	582	606
60	274	300	328	354	380	412	436	462	492	516	544	574	598	624	654
66	292	322	348	378	408	436	466	496	530	556	582	612	642	670	700
72	324	354	388	420	454	486	520	552	586	616	648	682	714	748	778
78	342	378	412	444	480	514	546	582	616	654	688	724	756	792	826
84	358	396	432	468	504	540	580	616	652	688	726	762	798	834	874
90	388	430	468	510	552	592	634	670	712	750	792	832	874	912	952
96	408	450	492	534	576	618	660	702	744	790	828	874	912	958	996

BASE MULTIPLIERS

L-5 4" DEEP 1.48

FRAME STYLE MULTIPLIERS

1- .18 FLANGE
2- .00 CHANNEL

BLADE GUAGE MULTIPLIERS

20 GUAGE GALVANIZED .00
18 GUAGE GALVANIZED .14
16 GUAGE GALVANIZED .24

ALL ALUMINUM CONSTRUCTION - 1.40

AIR-RITE MFG. RESERVES THE RIGHT TO CHANGE SPECIFICATIONS WITHOUT NOTICE.

AIR-RITE MANUFACTURING

SUBMITTAL/FABRICATION DETAIL:
MODEL: L-6 ADJUSTABLE FORMED LOUVER

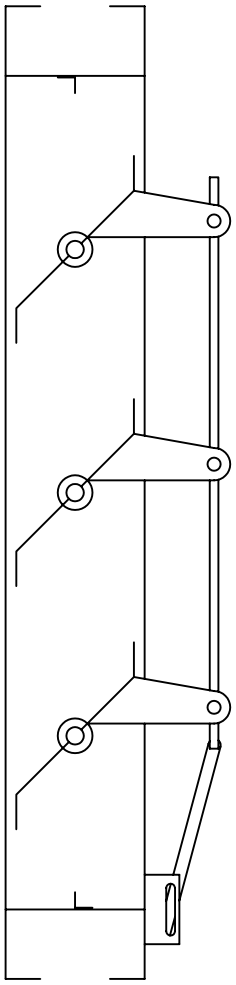

STANDARD CONSTRUCTION

1. FRAMES - 18 GA. GALVANIZED STEEL FORMED TO BOX SHAPE. (4" DEEP)
2. BLADES - 18 GA. GALVANIZED STEEL. (30° & 45° OPTION)
3. BLADE STOPS - 18 GA. GALVANIZED SPOT WELDED.
4. AXLES - SLIDE PIN TYPE MADE OF DIE CAST STEEL.
5. BUSHINGS - OIL IMPREGNATED BRONZE ½" DIA.
6. BRACKETS - 16 GA. ZINC PLATED STEEL WITH PIVOT PINS.
7. TIE RODS - ¼" ROUND STOCK.
8. ADJUSTABLE WING NUT OPERATOR.

NOTE:

LOUVER BUILT ¼" UNDERSIZED.
MINIMUM HEIGHT = 12".
MAXIMUM ONE PIECE PANEL CONSTRUCTION = 48" x 120".

Count	Size

Union "Blue Label" Made.

FRAME STYLES

1 - FLANGE (1 ½" WIDE)
2 - BOX (1 ½" x 4")

1

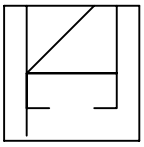

2

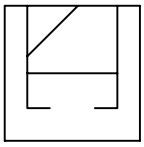

PROJECT NAME:	
ENGINEER:	
TAG #:	
CONTRACTOR:	
SUBMITTED BY:	

PAGE: L-6

AIR-RITE MFG. RESERVES THE RIGHT TO CHANGE SPECIFICATIONS WITHOUT NOTICE.

AIR–RITE MANUFACTURING

MODEL: L-6

STANDARD LOUVER PRICING

ADJUSTABLE LOUVER

	12	18	24	30	36	42	48
12	112	124	138	150	166	188	192
18	148	166	180	196	210	234	246
24	184	202	220	244	262	280	298
30	220	244	264	286	306	330	352
36	260	280	304	330	354	376	406
42	318	348	376	408	438	466	488
48	354	370	420	454	486	520	552
54	388	426	460	498	534	570	604
60	402	462	504	540	588	618	660
66	426	474	544	588	630	670	700
72	498	544	588	634	676	724	766
78	534	582	630	670	726	772	820
84	598	648	700	754	808	858	912
90	634	688	744	802	852	908	966
96	670	730	786	844	904	960	1020

NOTE: FOR LOUVERS LARGER THAN SHOWN, USE MULTIPLIERS ON THIS CHART.
FOR INTERMEDIATE SIZES NOT SHOWN, USE NEXT LARGER SIZE.

BASE MULTIPLIERS

L-6 3" DEEP 1.20
L-1 4" DEEP 1.00
L-1 6" DEEP 1.00

FRAME STYLE MULTIPLIERS

1- .18 FLANGE
2- .30 BOX

ALUMINUM CONSTRUCTION - 1.40

AIR-RITE MFG. RESERVES THE RIGHT TO CHANGE SPECIFICATIONS WITHOUT NOTICE.

AIR–RITE MANUFACTURING

SUBMITTAL / FABRICATATION DETAIL: EXTRUDED ALUMINUM LOUVER
MODEL: LE-1

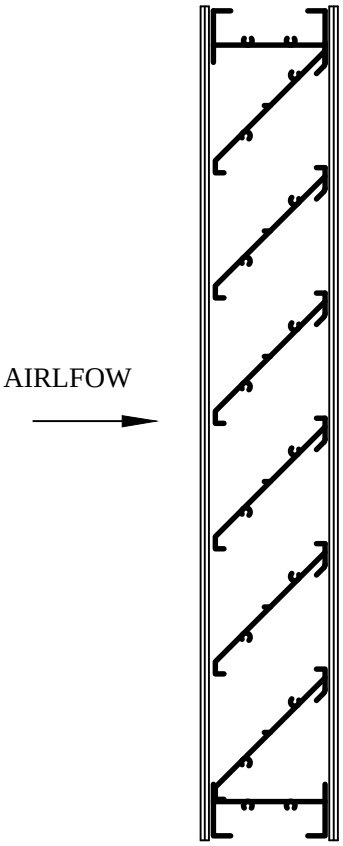

4" DEEP

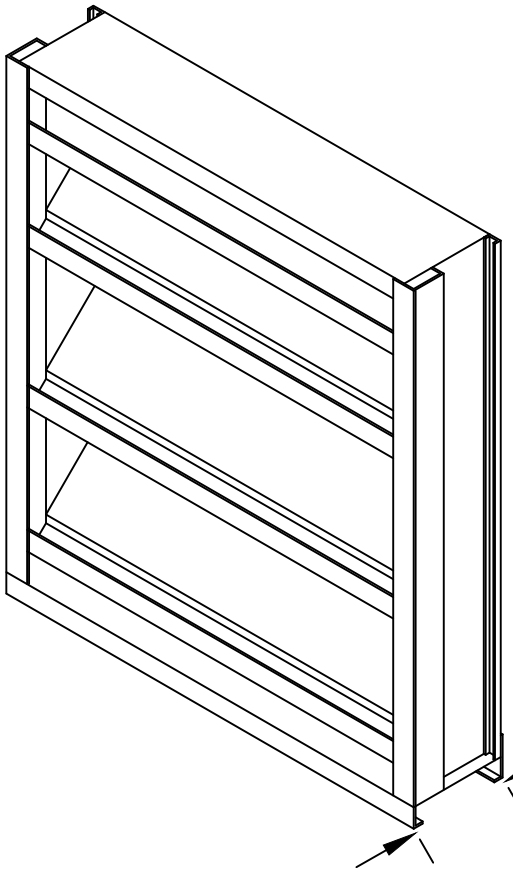

AMCA TESTED

QTY.	SIZE

WEATHER RESISTANT EXTRUDED ALUMINUM LOUVER
AIR-RITE MANUFACTURING'S EXTRUDED ALUMINUM LOUVERS ARE BUILT WITH SUPERIOR MATERIALS AND CRAFTSMANSHIP. STOUT FRAME (0.125 6063 T5) AND BLADE (0.094 6063 T5) CONSTRUCTION WITH INTERLOCKING BLADE TO FRAME DESIGN, ENSURE A PRODUCT THAT WILL WITHSTAND HARSH WEATHER CONDITIONS WHILE ENHANCING THE APPEARANCE OF THE SURROUNDING STRUCTURE.

STANDARD CONSTRUCTION:
FRAMES: .125 6063 T5 EXTRUDED ALUMINUM
BLADES: .094 6063 T5 EXTRUDED ALUMINUM WITH RAIN HOOK
BIRD SCREEN: ½" 18 GA. FLATTENED EXPANDED ALUMINUM

OPTIONS:
FLANGE: .125 6063 T5 EXTRUDED ALUMINUM
INSECT SCREEN
BAKED ENAMEL FINISHES
KYNAR FINISHES

MAXIMUM SINGLE SECTION = 72" x 96"
FOR LARGER SIZES USE MULTIPLE SECTIONS

See Sheet 1A for Performance Data

SHEET METAL AND AIR CONDITIONING SMACNA CONTRACTOR®

AMCA Tested

Union "Blue Label" Made.

PROJECT NAME:	
W/O #:	
TAG #:	
CONTRACTOR:	
SUBMITTED BY:	

AIR-RITE MFG. RESERVES THE RIGHT TO CHANGE SPECIFICATIONS WITHOUT NOTICE.

AIR–RITE MANUFACTURING

SUBMITTAL / FABRICATATION DETAIL: EXTRUDED ALUMINUM LOUVER
MODEL: LE-1

FREE AREA IN SQUARE FEET

WIDTH (INCHES)

	12	18	24	30	36	42	48	54	60	66	72
12	.37	.63	.88	1.11	1.35	1.6	1.84	2.08	2.32	2.56	2.81
18	.52	.84	1.16	1.48	1.8	2.13	2.45	2.77	3.1	3.52	3.74
24	.77	1.258	1.73	2.22	2.71	3.19	3.67	4.16	4.64	5.13	5.61
30	1.02	1.67	2.26	2.96	3.61	4.25	4.9	5.54	6.19	6.84	7.48
36	1.28	2.09	2.82	3.7	4.51	5.32	6.12	6.93	7.74	8.54	9.35
42	1.53	2.5	3.39	4.44	5.41	6.38	7.35	8.362	9.28	10.25	11.22
48	1.8	2.92	3.95	5.18	6.31	7.44	8.61	9.7	10.83	11.96	13.09
54	2.05	3.34	4.52	5.92	7.21	8.5	9.8	11.09	12.38	13.67	14.96
60	2.3	3.75	5.08	6.65	8.11	9.57	11.02	12.47	13.93	15.38	16.83
66	2.56	4.17	5.65	7.4	9.02	10.63	12.25	13.86	15.47	17.09	18.7
72	2.81	4.59	6.21	8.14	9.92	11.69	13.47	15.25	17.02	18.8	20.57
78	3.07	5.01	6.88	8.88	10.82	12.76	14.69	16.63	18.57	20.51	22.44
84	3.32	5.42	7.34	9.62	11.72	13.82	15.92	18.02	20.12	22.21	24.31
90	3.58	5.84	7.91	10.36	12.62	14.88	17.14	19.4	21.66	23.92	26.18
96	3.84	6.26	8.48	11.1	13.52	15.95	18.37	20.81	23.21	25.63	28.05

WATER PENETRATION

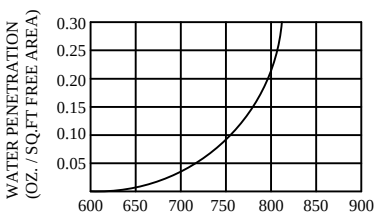

BEGINNING WATER PENETRATION: 626 FPM
SAMPLE SIZE: 48" x 48", .15 MINIMUM TEST

Water Penetration

AMCA defines the beginning point of water penetration as the free area velocity at the intersection of a simple linear regression of test data and the line of 0.01 ounces of water per square foot of free area and is measured through a 48" x 48" louver during a 15 minute period. The AMCA water penetration test provides a method for comparing louver models and designs as to their efficiency in resisting the penetration of rainfall under specific lab condtions. Air-Rite Mfg. recommends that intake louvers are selected with a reasonable margin of safety below the beginning point of water penetration in order to avoid unwanted penetration during severe storm conditions.

AIR PERFORMANCE

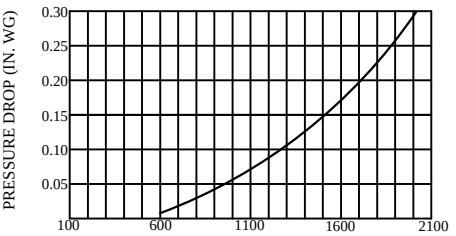

SAMPLE SIZE: 48" x 48", APPLIES TO INTAKE MODE ONLY
DOES NOT INCLUDE EFFECT OF BIRD SCREEN. FOR STANDARD AIR - .075 LB/FT.

Selection Criteria

Follow the steps listed below to calculate the louver size needed to satisfy the required air volume while minimizing the adverse effects of water penetration and pressure loss.

1. Determine the Free Area Velocity (FAV) at the maximum allowable pressure loss using the *Pressure Loss* chart to the left. While job conditions vary, typically, the maximum allowable pressure loss should not exceed 0.15 in w.g., and the FAV for 0.15 in wg. pressure loss is listed on the front page of this louver model.

2. Intake Applications: If the FAV at the Beginning Point of Water Penetration shown to the left is less that the FAV from step 1, then use the FAV at the Beginning Point of Water Penetration in step 3, otherwise use the FAV from step 1.

   Exhaust Applications: Use the FAV from step 1 in step 3.

3. Calculate the total louver square footage required using the following equation.

   _____cfm / _____ fpm = _____ft^2
   Required Air Volume / FAV / Required Louver (Free-Area) Size in ft^2

4. Using the Free Area chart above, select a louver width and height that yields a free area ft^2 greater than or equal to the required louver size calculated in step 3.

Union "Blue Label" Made.

PROJECT NAME:
W/O #:
TAG #:
CONTRACTOR:
SUBMITTED BY:

AIR-RITE MFG. RESERVES THE RIGHT TO CHANGE SPECIFICATIONS WITHOUT NOTICE.

AIR–RITE MANUFACTURING

MODEL: LE-1

STANDARD LOUVER PRICING

EXTRUDED ALUMINUM LOUVERS

WIDTH

HEIGHT	12	18	24	30	36	42	48	54	60	66	72
12	142	170	190	218	236	272	298	334	352	394	412
18	188	218	244	286	312	346	376	408	442	464	532
24	214	250	282	330	360	402	438	502	530	602	646
30	254	308	348	408	440	500	552	614	670	742	780
36	280	342	388	448	496	566	626	688	740	834	896
42	322	396	456	524	578	668	744	822	900	962	1014
48	346	426	492	564	624	734	778	880	940	1016	1078
54	388	484	556	646	710	832	900	1012	1106	1160	1236
60	410	514	584	676	752	874	956	1068	1170	1236	1300
66	458	578	656	764	852	1000	1086	1234	1308	1394	1484
72	484	604	694	808	896	1048	1138	1300	1388	1468	1564
78	536	670	768	898	1000	1158	1272	1430	1540	1622	1720
84	558	702	800	930	1044	1212	1326	1494	1600	1696	1786
90	604	764	864	1028	1134	1314	1440	1612	1730	1818	1922
96	620	778	886	1072	1182	1366	1496	1660	1790	1892	2020

WHEN ORDERING GIVE WIDTH DIMENSION FIRST THEN HEIGHT (W x H).
LOUVERS ARE UNDERSIZED 1/4" EACH DIMENSION.
LOUVERS INCLUDE MESH BIRDSCREEN STANDARD.
MILL FINISH & BOX FRAME STANDARD.
CONCEALED BLADE SUPPORTS ON 60" OR WIDER.
MINIMUM SIZE = 8" x 12".
MAXIMUM SIZE 1-SECTION 72" x 96".

EXTRUDED ALUMINUM #6063-T5
.094 THICKNESS ON ALL PARTS
APPROX. 4" DEEP FRAME.

LE-1S = STANDARD EXTRUDED LOUVER
LE-1D = DRAINABLE EXTRUDED LOUVER

LOUVER TYPE & ACCESSORIES	ADD TO LIST
STRAIGHT BLADE	STANDARD
DRAINABLE BLADE	LIST x 1.20
BOX FRAME	STANDARD
FLANGE FRAME	LIST x 1.06
BIRDSCREEN	STANDARD
INSECT SCREEN	LIST x 1.03
SPECIAL FRAME OR SILLS	CONSULT FACTORY
VARA-PRIME PRIME COAT FINISH	$50.00 LIST SET UP CHARGE PER ORDER (PRIME COAT COSTS USE STD. MULT.) $10.00 LIST PER SQ. FT. ADD (USE STD. MULT.)

ADD PRIME COAT & ENAMEL ADDERS TOGETHER WHEN ORDERING ENAMEL FINISHES

ENAMEL FINISH	ADD 50%
SPECIAL FINISHES	CONSULT FACTORY (KYNAR FINISHES, ANODIZED FINISHES)
WELDED CONSTRUCTION	CONSULT FACTORY

CALL FOR FACTORY QUOTE ABOVE $5,000.00 LIST
ADD 5-DAYS TO LEAD TIMES FOR PRIME COAT & ENAMEL FINISHES

AIR–RITE MANUFACTURING

SUBMITTAL / FABRICATATION DETAIL: EXTRUDED ALUMINUM LOUVER
MODEL: LE-2

Application
The LE-2 drainable blade louver is designed to prevent water penetration in non-wind driven rain applications by collecting water in frame and blade gutters and channeling it into downspouts and away from airflow paths.

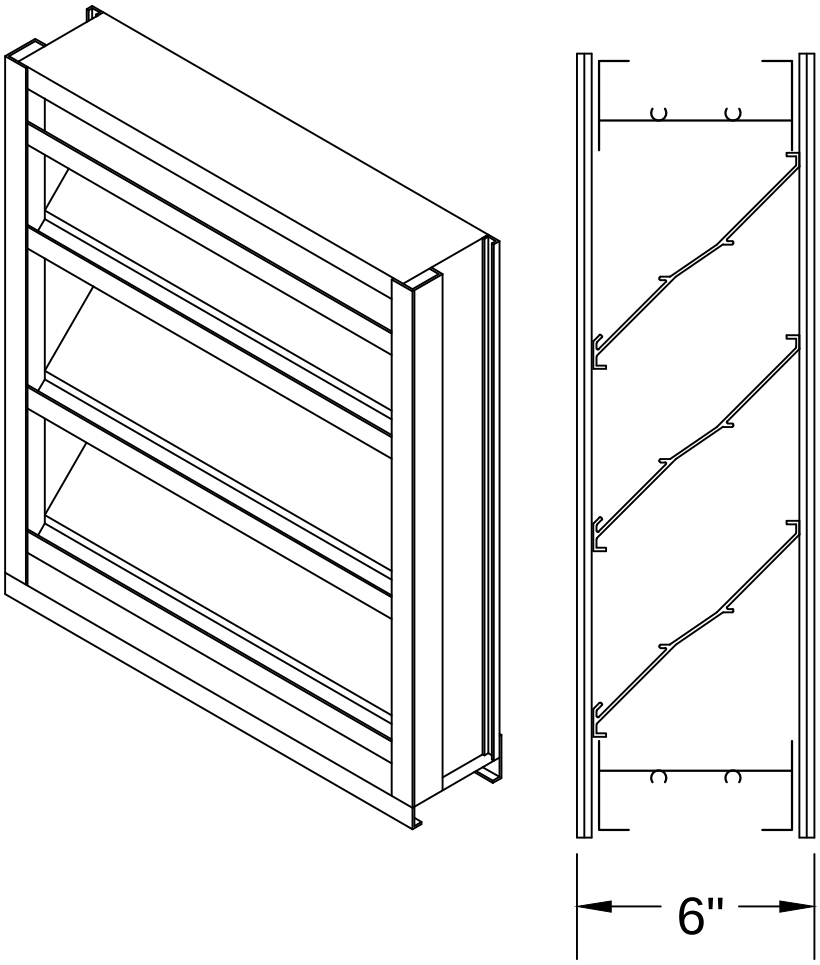

Standard Construction
Material: Mill finish 6063-T5 extruded aluminum.

Frame: 6" deep x 0.081" thick channel.

Blades: 45 x 0.081" thick drainable style.

Screen: ½" x 0.063" expanded and flattened aluminum.

Mullion: Visible.

Minimum Size: 12" x 12"

Maximum Size: Single section: 60" x 120"
Multiple Sections: Unlimited

Options
- ☐ **Factory Finish:** Mill 6063-T5 extruded aluminum.
- ☐ High Performance Kynar Two Coat System.
- ☐ Baked Enamel
- ☐ Clear or Color Anodized, Class 1
- ☐ Powder Coat.

QTY.	SIZE

AMCA Tested

Union "Blue Label" Made.

See Sheet 2A for Performance Data.

PROJECT NAME:	
W/O #:	
TAG #:	
CONTRACTOR:	
SUBMITTED BY:	

AIR-RITE MFG. RESERVES THE RIGHT TO CHANGE SPECIFICATIONS WITHOUT NOTICE.

FREE AREA IN SQUARE FEET

WIDTH (INCHES)

	12	18	24	30	36	42	48	54	60	66	72
12	.37	.63	.88	1.11	1.35	1.6	1.84	2.08	2.32	2.56	2.81
18	.52	.84	1.16	1.48	1.8	2.13	2.45	2.77	3.1	3.52	3.74
24	.77	1.258	1.73	2.22	2.71	3.19	3.67	4.16	4.64	5.13	5.61
30	1.02	1.67	2.26	2.96	3.61	4.25	4.9	5.54	6.19	6.84	7.48
36	1.28	2.09	2.82	3.7	4.51	5.32	6.12	6.93	7.74	8.54	9.35
42	1.53	2.5	3.39	4.44	5.41	6.38	7.35	8.362	9.28	10.25	11.22
48	1.8	2.92	3.95	5.18	6.31	7.44	8.61	9.7	10.83	11.96	13.09
54	2.05	3.34	4.52	5.92	7.21	8.5	9.8	11.09	12.38	13.67	14.96
60	2.3	3.75	5.08	6.65	8.11	9.57	11.02	12.47	13.93	15.38	16.83
66	2.56	4.17	5.65	7.4	9.02	10.63	12.25	13.86	15.47	17.09	18.7
72	2.81	4.59	6.21	8.14	9.92	11.69	13.47	15.25	17.02	18.8	20.57
78	3.07	5.01	6.88	8.88	10.82	12.76	14.69	16.63	18.57	20.51	22.44
84	3.32	5.42	7.34	9.62	11.72	13.82	15.92	18.02	20.12	22.21	24.31
90	3.58	5.84	7.91	10.36	12.62	14.88	17.14	19.4	21.66	23.92	26.18
96	3.84	6.26	8.48	11.1	13.52	15.95	18.37	20.81	23.21	25.63	28.05

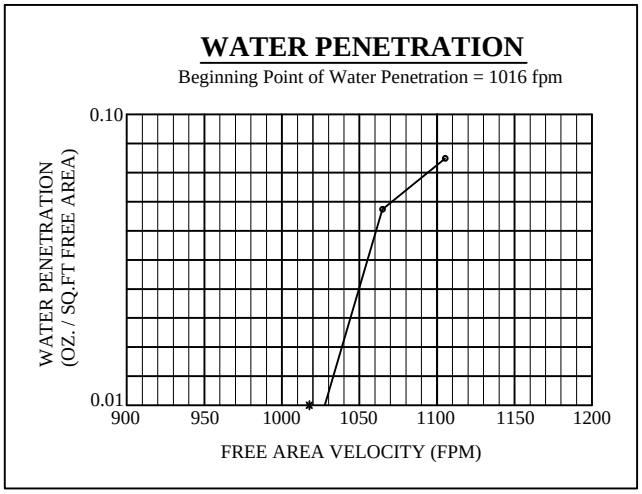

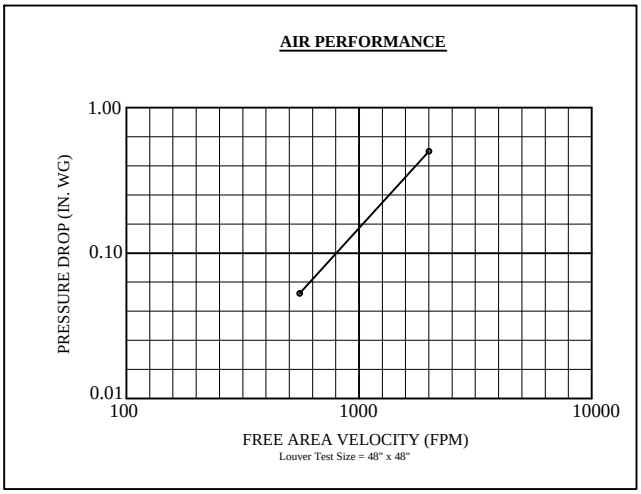

Water Penetration

AMCA defines the beginning point of water penetration as the free area velocity at the intersection of a simple linear regression of test data and the line of 0.01 ounces of water per square foot of free area and is measured through a 48" x 48" louver during a 15 minute period. The AMCA water penetration test provides a method for comparing louver models and designs as to their efficiency in resisting the penetration of rainfall under specific lab condtions. Air-Rite Mfg. recommends that intake louvers are selected with a reasonable margin of safety below the beginning point of water penetration in order to avoid unwanted penetration during severe storm conditions.

Selection Criteria

Follow the steps listed below to calculate the louver size needed to satisfy the required air volume while minimizing the adverse effects of water penetration and pressure loss.

1. Determine the Free Area Velocity (FAV) at the maximum allowable pressure loss using the *Pressure Loss* chart to the left. While job conditions vary, typically, the maximum allowable pressure loss should not exceed 0.15 in w.g., and the FAV for 0.15 in wg. pressure loss is listed on the front page of this louver model.

2. Intake Applications: If the FAV at the Beginning Point of Water Penetration shown to the left is less that the FAV from step 1, then use the FAV at the Beginning Point of Water Penetration in step 3, otherwise use the FAV from step 1.

   Exhaust Applications: Use the FAV from step 1 in step 3.

3. Calculate the total louver square footage required using the following equation.

   _____cfm / _____ fpm = _____ ft^2
   Required Air Volume / FAV / Required Louver (Free-Area) Size in ft^2

4. Using the Free Area chart above, select a louver width and height that yields a free area ft^2 greater than or equal to the required louver size calculated in step 3.

AIR-RITE MFG. RESERVES THE RIGHT TO CHANGE SPECIFICATIONS WITHOUT NOTICE.

AIR-RITE MANUFACTURING

MODEL: LE-2

STANDARD LOUVER PRICING

EXTRUDED ALUMINUM LOUVERS

WIDTH

HEIGHT	12	18	24	30	36	42	48	54	60	66	72
12	171	204	228	262	284	327	358	401	423	473	495
18	226	262	293	344	375	416	452	490	531	557	639
24	257	300	339	396	432	483	526	603	636	723	776
30	305	370	418	490	528	600	663	737	804	891	936
36	336	411	466	538	596	680	752	826	888	1001	1076
42	387	476	548	629	694	802	893	987	1080	1155	1217
48	416	512	591	677	749	881	934	1056	1128	1220	1294
54	466	581	668	776	852	999	1080	1215	1328	1392	1484
60	492	617	701	812	903	1049	1148	1282	1404	1484	1560
66	550	694	788	918	1023	1200	1304	1481	1570	1673	1781
72	581	725	833	970	1076	1258	1366	1560	1666	1762	1877
78	644	804	922	1078	1200	1390	1527	1716	1848	1947	2064
84	670	843	960	1116	1253	1455	1592	1793	1920	2036	2144
90	725	917	1036	1234	1361	1577	1728	1935	2076	2182	2307
96	744	934	1064	1287	1419	1640	1796	1992	2148	2271	2424

WHEN ORDERING GIVE WIDTH DIMENSION FIRST THEN HEIGHT (W x H).
LOUVERS ARE UNDERSIZED 1/4" EACH DIMENSION.
LOUVERS INCLUDE MESH BIRDSCREEN STANDARD.
MILL FINISH & BOX FRAME STANDARD.
CONCEALED BLADE SUPPORTS ON 60" OR WIDER.
MINIMUM SIZE = 8" x 12".
MAXIMUM SIZE 1-SECTION 72" x 96".

EXTRUDED ALUMINUM #6063-T5
.094 THICKNESS ON ALL PARTS
APPROX. 6" DEEP FRAME.

LE-2S = STANDARD EXTRUDED LOUVER
LE-2D = DRAINABLE EXTRUDED LOUVER

LOUVER TYPE & ACCESSORIES	ADD TO LIST
STRAIGHT BLADE	NO ADD
BOX FRAME	STANDARD
FLANGE FRAME	LIST x 1.20
BIRDSCREEN	STANDARD
INSECT SCREEN	LIST x 1.10
SPECIAL FRAME OR SILLS	CONSULT FACTORY

ADD PRIME COAT & ENAMEL ADDERS TOGETHER WHEN ORDERING ENAMEL FINISHES
POWDER COAT FINISH ADD 50% (MIN. $95.00 NET)

SPECIAL FINISHES CONSULT FACTORY (KYNAR FINISHES, ANODIZED FINISHES)
WELDED CONSTRUCTION CONSULT FACTORY

CALL FOR FACTORY QUOTE ABOVE $5,000.00 LIST
ADD 5-DAYS TO LEAD TIMES FOR PRIME COAT & ENAMEL FINISHES

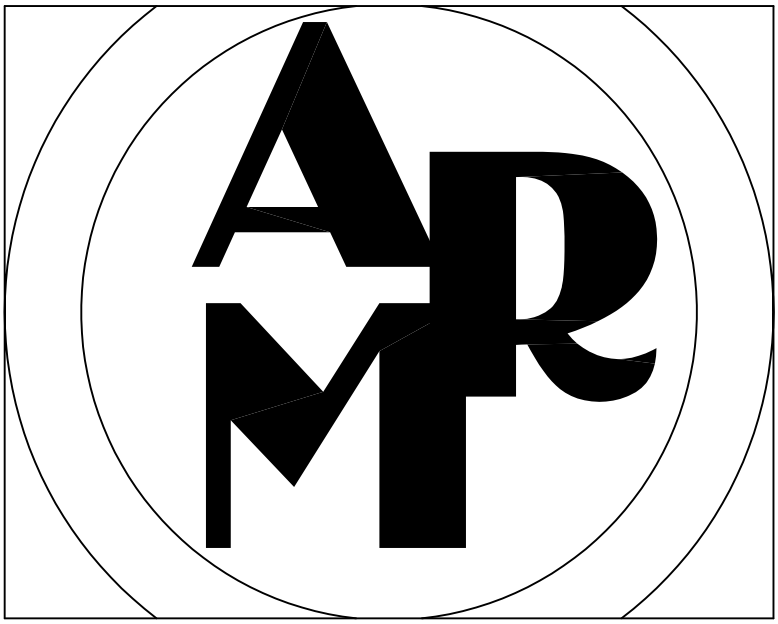

AIR-RITE MANUFACTURING, LLC

PENTHOUSE

AIR-RITE MANUFACTURING

SUBMITTAL/FABRICATION DETAIL
MODEL: LP-1 **FORMED** LOUVERED PENTHOUSE

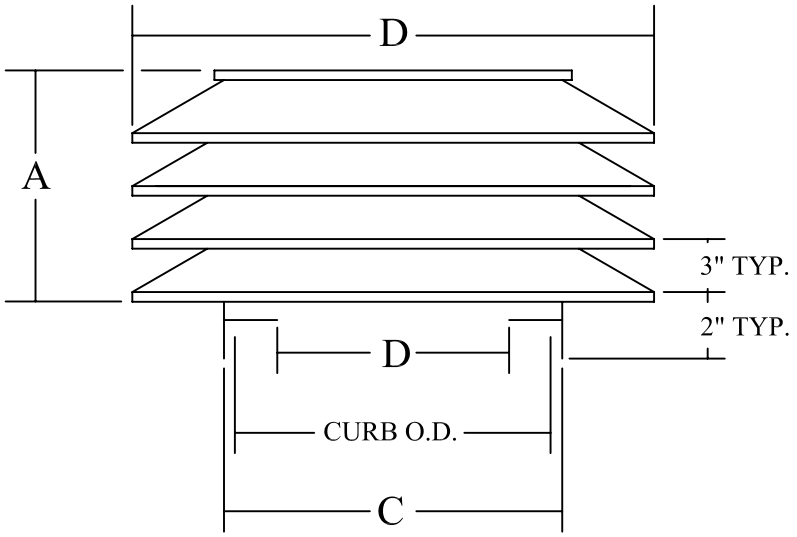

STANDARD CONSTRUCTION

1. FRAME IS .063 5052-T5 FORMED ALUMINUM WELDED.
2. BLADES ARE .063 5052-T5 FORMED ALUMINUM WITH WELDED CORNERS.
3. TOP IS .063 FORMED ALUMINUM WITH 1" INSULATION.
4. ½" MESH BIRD SCREEN.
5. STANDARD FINISH - MILL

BAKED ENAMEL AND ANODIZED FINISHES AVAILABLE.

QTY.	THROAT SIZE	ROWS

(A) HEIGHT DIMENSION
2 ROW = 8"
3 ROW = 11"
4 ROW = 14"
6 ROW = 20"
8 ROW = 26"

(B) DIMENSION
THROAT I.D. + 1 ¼"

(C) CURB CAP DIMENSION
THROAT I.D. + 5 ½"

(D) DIMENSION
THROAT I.D. + 12 ½"

CURB O.D.
THROAT I.D. + 4"

MATERIAL: GALVANIZED ☐

ALUMINUM ☐

PAINT-LOC ☐

NOTE: MINIMUM SIZE = 12" x 12"
MAX. 1 PC. CONSTRUCTION = 48" x 48"

Union "Blue Label" Made.

PROJECT NAME:
W/O #:
TAG #:
CONTRACTOR:
SUBMITTED BY:

PAGE: LP-1

AIR-RITE MFG. RESERVES THE RIGHT TO CHANGE SPECIFICATIONS WITHOUT NOTICE.

AIR–RITE MANUFACTURING

SUBMITTAL/FABRICATION DETAIL: EXT. ALUM. LOUVERED PENTHOUSE
MODEL: LPE-1

STANDARD CONSTRUCTION

1. FRAME IS .125 6063-T5 EXT. ALUM. WELDED.
2. BLADES ARE .094 6063-T5 EXT. ALUM. WITH WELDED CORNERS. ALL OTHER FASTENERS ARE MECHANICAL TYPE.
3. TOP IS .050 FORMED ALUM. with optional 1/2" noise dampening insulation
4. SCREEN IS ½" 18 GA. FLATTENED EXPANDED METAL.
5. STANDARD FINISH - MILL

**BAKED ENAMEL AND ANODIZED FINISHES AVAILABLE.

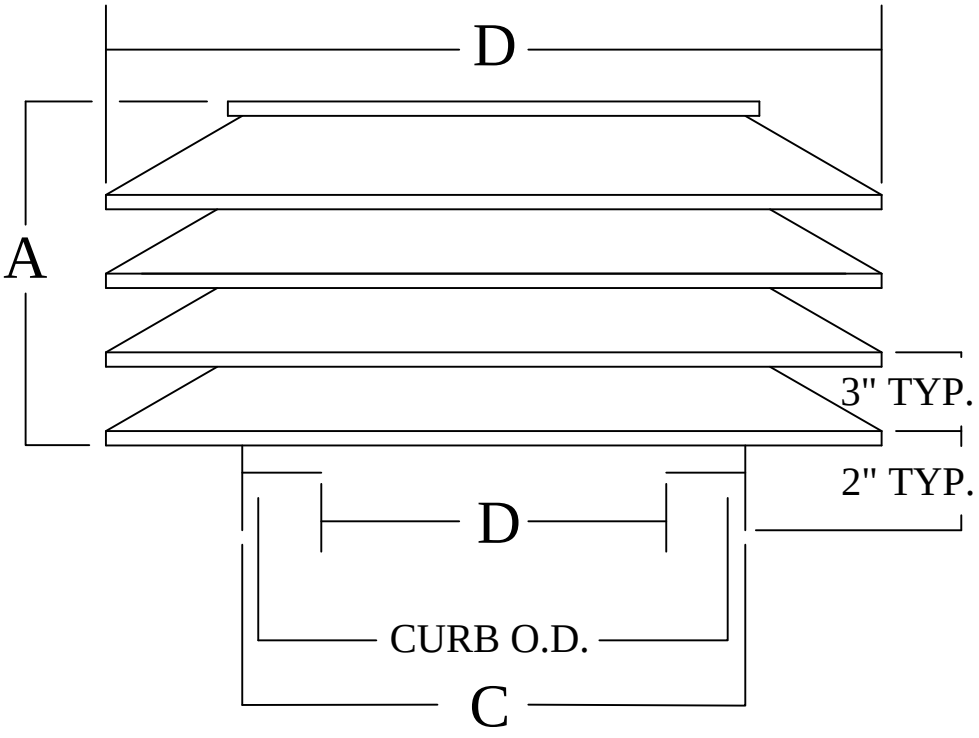

(A) HEIGHT DIMENSION
2 ROW 8"
3 ROW 11"
4 ROW 14"
6 ROW 20"
8 ROW 26"

(B) DIMENSION
THROAT I.D. + 1¼"

(C) CURB CAP DIMENSION
THROAT I.D. + 5½"

(D) DIMENSION
THROAT I.D. + 12½"

CURB O.D.

THROAT I.D. + 4"

QTY.	SIZE	ROWS

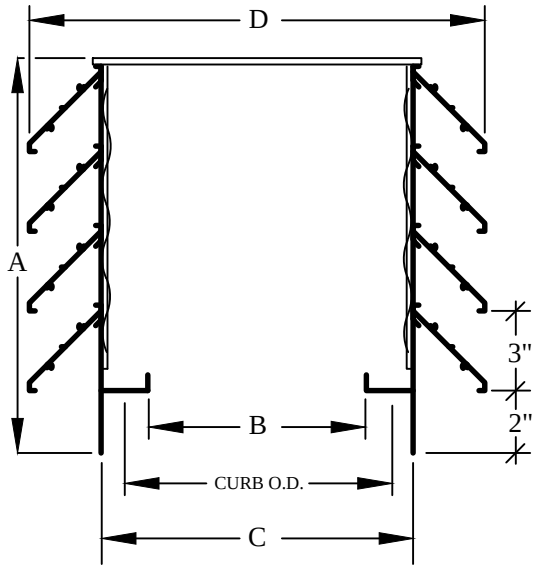

Union "Blue Label" Made.

NOTE: MINIMUM SIZE = 12" x 12"
MAXIMUM 1 PC. CONSTRUCTION = 48" x 48"

PROJECT NAME:	
W/O #:	
TAG #:	
CONTRACTOR:	
SUBMITTED BY:	

PAGE: LPE-1

AIR-RITE MFG. RESERVES THE RIGHT TO CHANGE SPECIFICATIONS WITHOUT NOTICE.

AIR–RITE MANUFACTURING

SPECIFICATION SHEET:
MODEL: LPE-1 (EXTRUDED ALUMINUM PENTHOUSE)

THE INFORMATION ON THIS CHART WAS TAKEN FROM SUBMITTAL SHEET

THROAT I.D.	THROAT SQ. FT.	ROW	A	B	C	D	CURB O.D.	LPE-1 F.A. SQ. FT.
12 x 12	1.0	2	8"	12 ¼"	17 ½"	24 ½"	16 x 16	2.19
12 x 12	1.0	3	11"	13 ¼"	17 ½"	24 ½"	16 x 16	3.28
14 x 14	1.36	2	8"	15 ¼"	19 ½"	26 ½"	18 x 18	2.44
14 x 14	1.36	3	11"	15 ¼"	19 ½"	26 ½"	18 x 18	3.66
16 x 16	1.78	2	8"	17 ¼"	21 ½"	28 ½"	20 x 20	2.69
16 x 16	1.78	3	11"	17 ¼"	21 ½"	28 ½"	20 x 20	4.04
18 x 18	2.25	2	8"	19 ¼"	23 ½"	30 ½"	22 x 22	2.94
18 x 18	2.25	3	11"	19 ¼"	23 ½"	30 ½"	22 x 22	4.41
20 x 20	2.78	2	8"	21 ¼"	25 ½"	32 ½"	24 x 24	3.19
20 x 20	2.78	3	11"	21 ¼"	25 ½"	32 ½"	24 x 24	4.79
24 x 24	4.0	3	11"	25 ¼"	29 ½"	36 ½"	28 x 28	5.54
24 x 24	4.0	4	14"	25 ¼"	29 ½"	36 ½"	28 x 28	7.38
30 x 30	6.25	3	11"	31 ¼"	35 ½"	42 ½"	34 x 34	6.65
30 x 30	6.25	4	14"	31 ¼"	35 ½"	42 ½"	34 x 34	8.88
36 x 36	6.25	4	14"	37 ½"	41 ½"	48 ½"	40 x 40	10.38
42 x 42	12.5	4	14"	43 ¼"	47 ½"	54 ½"	46 x 46	11.88
48 x 48	16.5	4	14"	49 ¼"	53 ½"	60 ½"	50 x 52	13.38

THROAT I.D. = REQUIRED THROAT INSIDE DIMENSIONS
THROAT SQ. FT. = REQUIRED THROAT SQUARE FOOT
ROW = NUMBER OF ROWS OF BLADES
A,B,C,D = DIMENSIONS TAKE FROM SUBMITTAL SHEET
CURB O.D. = OUTSIDE ROOF CURB DIMENSIONS
LPE-1 F.A. SQ. FT. = AMOUNT OF FREE AREA IN PENTHOUSE

RECTANGULAR THROAT PENTHOUSE CAN BE CALCULATED
USING EQUIVALENT SQ. FT. OR EQUAL THROAT TOTAL LENGTH

FREE AREA PER LINEAL FT. OF DIMINUTION "C"

2-ROW = .375 SQ. FT. PER LINEAL FT.
3-ROW = .563 SQ. FT. PER LINEAL FT.
4-ROW = .75 SQ. FT. PER LINEAL FT.

EXAMPLE 12" x 12" I.D. THROAT 2-ROW TALL
12" x 12" I.D. THROAT, DIMENSION C = 17 ½"
17 ½" x 4 SIDES = 70". DIVIDED BY 12" = 5.83 LINEAL FT.
5.83 LINEAL FT. x .375 = 2.19 SQ. FT. FREE AREA.

AIR PERFORMANCE

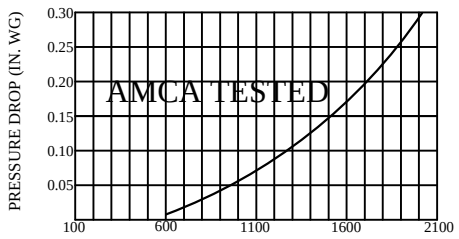

SAMPLE SIZE: 48" x 48", APPLIES TO INTAKE MODE ONLY
DOES NOT INCLUDE EFFECT OF BIRD SCREEN. FOR
STANDARD AIR - .075 LB/FT.

WATER PENETRATION

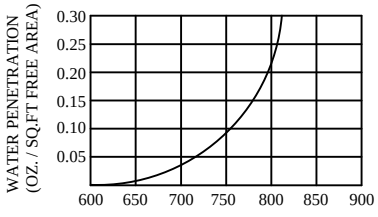

BEGINNING WATER PENETRATION: 626 FPM
SAMPLE SIZE: 48" x 48", .15 MINIMUM TEST

Union "Blue Label" Made.

PROJECT NAME:
ENGINEER:
TAG #:
CONTRACTOR:
SUBMITTED BY:

AIR-RITE MFG. RESERVES THE RIGHT TO CHANGE
SPECIFICATIONS WITHOUT NOTICE.

LPE-1 Specifications

Air-Rite Mfg.

Extruded Louvered Penthouse

Intake Performance Data

Throat Size In.	No. of Tiers	Hood Size In.	LPE Height In.	Throat Area SF	(WG) Pressure Drop						
					Ducted						
					0.02	0.1	0.15	0.2	0.25	0.3	0.5
					Non-ducted						
					0.028	0.135	0.2	0.27	0.325	0.395	0.65
					(CFM) Airflow						
12 x 12	2	24.75 x 24.75	7	1.17	325	725	880	1025	1150	1250	1620
12 x 14	2	24.75 x 26.75	7	1.35	360	820	1000	1150	1290	1390	1825
12 x 16	2	24.75 x 28.75	7	1.53	400	900	1105	1275	1430	1565	2020
12 x 18	2	24.75 x 30.75	7	1.71	440	985	1205	1390	1555	1700	2200
12 x 24	2	24.75 x 36.75	7	2.26	540	1200	1480	1710	1913	2100	2700
14 x 14	2	26.75 x 26.75	7	1.56	410	915	1120	1295	1445	1580	2045
14 x 16	2	26.75 x 28.75	7	1.77	450	1005	1230	1420	1590	1740	2245
14 x 18	2	26.75 x 30.75	7	1.98	490	1090	1330	1540	1720	1885	2435
14 x 24	2	26.75 x 36.75	7	2.6	595	1325	1620	1875	2090	2290	2960
14 x 30	2	26.75 x 42.75	7	3.23	855	1910	2340	2705	3025	3310	4275
16 x 16	2	28.75 x 28.75	7	2	491	1100	1345	1555	1735	1900	2455
16 x 18	2	28.75 x 30.75	7	2.24	530	1190	1455	1675	1875	2055	2650
16 x 24	2	28.75 x 36.75	7	2.95	640	1430	1750	2015	2250	2470	3190
16 x 30	3	28.75 x 42.75	10	3.33	930	2090	2555	2950	3300	3610	4660
16 x 32	3	28.75 x 44.75	10	3.89	980	2190	2680	3095	3460	3790	4890
18 x 18	2	30.75 x 30.75	7	2.5	570	1275	1565	1805	2020	2210	2855
18 x 24	2	30.75 x 36.75	7	3.3	680	1520	1860	2150	2400	2632	3400
18 x 30	3	30.75 x 42.75	10	4.09	1000	2245	2750	3175	3550	3885	5020
18 x 32	3	30.75 x 44.75	10	4.35	1050	2350	2880	3325	3715	4070	5255
18 x 36	3	30.75 x 48.75	10	4.88	1140	2560	3130	3615	4040	4425	5715
24 x 24	3	36.75 x 36.75	10	4.34	1035	2310	2830	3270	3655	4002	5165
24 x 30	3	36.75 x 42.75	10	5.38	1190	2665	3265	3770	4215	4615	5960
24 x 32	3	36.75 x 44.75	10	5.73	1240	2775	3400	3925	4390	4810	6210
24 x 36	4	36.75 c 48.75	13	6.42	1595	3565	4365	5040	5635	6170	7970
24 x 42	4	36.75 x 54.75	13	7.46	1780	3975	4870	5625	6290	6890	8895
24 x 48	4	36.75 x 60.75	13	8.5	1960	4375	5360	6190	6920	7580	6775
30 x 30	3	42.75 x 42.75	10	6.67	1355	3030	3710	4285	4790	5250	7035
30 x 32	3	42.75 x 44.75	10	7.1	1410	3145	3855	4450	4975	5450	9145
30 x 36	4	42.75 x 48.75	13	7.96	1830	4090	5010	5785	6465	7085	10115
30 x 42	4	42.75 x 54.75	13	9.25	2025	4525	5540	6400	7150	7835	11045
30 x 48	4	42.75 x 60.75	13	10.55	2210	4940	6050	6985	7810	85555	13825
30 x 54	5	42.75 x 66.75	16	11.84	2765	6185	7575	8745	9775	10710	16590
30 x 60	6	42.75 x 72.75	19	13.1	3320	7420	9085	10490	11730	12850	7290
32 x 32	3	44.75 x 44.75	10	7.56	1460	3260	3995	4610	5160	5650	9510
32 x 36	4	44.75 x 48.75	13	8.48	1905	4525	5210	6015	6725	7370	1090
32 x 42	4	44.75 x 54.75	13	9.85	2100	4690	5750	6635	7420	8125	10490
32 x 48	4	44.75 x 60.75	13	11.23	2285	5110	6260	7230	8080	8850	11430
32 x 54	5	44.75 x 66.74	16	12.6	2870	6415	7855	9074	10145	11110	14345
32 x 60	6	44.75 x 72.75	19	13.98	3450	7715	9450	10910	12200	13365	17250
32 x 72	7	44.75 x 84.75	22	16.73	4315	9650	11815	13644	15255	16710	21570

LPE-1 Specifications

Air-Rite Mfg.

Extruded Louvered Penthouse

Intake Performance Data

Throat Size In.	No. of Tiers	Hood Size In.	LPE Height In.	Throat Area SF	(WG) Pressure Drop						
					Ducted						
					0.02	0.1	0.15	0.2	0.25	0.3	0.5
					Non-ducted						
					0.028	0.135	0.2	0.27	0.325	0.395	0.65
					(CFM) Airflow						
36 x 36	4	48.75 x 48.75	13	9.5	2045	4565	5595	6460	7225	7910	10215
36 x 42	4	48.75 x 54.75	13	11.05	2240	5015	6140	7090	7925	8685	11210
36 x 48	5	48.75 x 60.75	16	12.6	3835	6340	7760	8960	10020	10975	14170
36 x 54	5	48.75 x 66.75	16	14.13	3065	6855	8395	9695	10840	11875	15330
36 x 60	6	48.75 x 72.75	19	15.67	3700	4275	10135	11705	13085	14335	18505
36 x 72	7	48.75 x 84.75	22	18.75	4635	10360	12690	14651	16380	17945	23165
42 x 42	5	54.75 x 54.75	16	12.84	2855	6385	7820	9030	10095	11060	14275
42 x 48	5	54.75 x 60.75	16	14.63	3100	6940	8500	9810	10970	12020	15515
42 x 54	5	54.75 x 66.75	16	16.42	3340	7470	9150	10565	11810	12940	16705
42 x 60	6	54.75 x 72.75	19	18.21	4050	9055	11090	12805	14320	15683	20245
42 x 72	7	54.75 x 84.75	22	21.8	5070	11340	13890	16040	17930	19645	25360
42 x 84	8	54.75 x 96.75	25	25.38	6160	13775	16870	19480	21780	23855	30800
48 x 48	5	60.75 x 60.75	16	16.67	3355	7505	9190	10610	11865	12995	16780
48 x 54	6	60.75 x 66.75	19	18.71	4090	9145	11200	12930	14455	15835	20445
48 x 60	6	60.75 x 72.75	19	20.75	4375	9780	11980	13830	15465	16940	21670
48 x 72	7	60.75 x 84.75	22	24.84	5475	12245	15000	17320	19360	21210	27380
48 x 84	8	60.75 x 96.75	25	28.92	6655	14880	18225	21040	23525	25770	33270
48 x 96	9	60.75 x 108.75	28	33	7900	17660	21630	24975	27924	30590	39490
54 x 54	6	66.75 x 66.75	19	21	4390	9820	12025	18885	15525	17005	21950
54 x 60	6	66.75 x 72.75	19	23.3	4680	10465	12820	14800	16550	18130	23405
54 x 72	7	66.75 x 84.75	22	27.88	5855	13095	46040	18520	20704	22680	29280
54 x 84	8	66.75 x 96.75	25	32.46	7115	15910	19485	22500	25155	27555	35575
54 x 96	9	66.75 x 108.75	28	37	8450	18890	23135	26715	29870	32720	42240
54 x 108	10	66.75 x 120.75	31	41.63	9850	22020	26970	31143	34820	38140	49240
60 x 60	7	72.75 x 72.75	22	25.84	5550	12410	15205	17555	19625	21500	27755
60 x 72	7	72.75 x 84.75	22	30.92	6220	13905	17030	19660	21985	24080	31090
60 x 84	8	72.75 x 96.75	25	36	7550	16885	20680	23875	26695	29240	37750
60 x 96	9	72.75 x 108.75	28	41	8965	20045	24550	28350	31695	34720	44825
60 x 108	10	72.75 x 120.75	31	46.17	10455	23375	28630	33060	36960	40490	52270
60 x 120	10	72.75 x 132.75	31	51.25	12655	28300	34670	40020	44745	49015	63280

AIR–RITE MANUFACTURING

MODEL: LP-1, LPE-1

STANDARD PENTHOUSE PRICING

EXTRUDED ALUMINUM PENTHOUSES (LPE-1)
FORMED GALVANIZED PENTHOUSES (LP-1)

	12"	14"	16"	18"	20"	22"	24"	30"	36"	42"	48"
12"	500	530	548	588	630	678	728	764	792	826	844
14"	530	548	588	630	678	728	778	814	846	876	890
16"	548	588	610	646	692	738	790	832	876	918	936
18"	588	630	646	664	706	754	808	858	908	962	984
20"	630	678	692	706	732	778	814	880	944	1008	1028
22"	678	728	738	754	778	782	828	908	986	1066	1098
24"	728	778	788	808	814	828	836	926	1016	1116	1152
30"	764	814	832	858	880	908	926	934	1024	1134	1204
36"	792	846	876	908	944	988	1016	1024	1062	1206	1242
42"	826	876	918	962	1008	1066	1116	1134	1206	1224	1296
48"	844	890	936	984	1030	1098	1152	1204	1242	1296	1332
54"	864	930	994	1060	1124	1188	1254	1318	1384	1452	1512
60"	930	994	1060	1124	1188	1254	1322	1390	1462	1530	1584

***FOR LP-1 CONSTRUCTION DEDUCT: 10% ***

- ALL PRICES BASED ON TWO ROWS HIGH
- CONSULT FACTORY FOR SIZES NOT SHOWN

OPTIONS:
3 ROW ..... ADD 25%
4 ROW ..... ADD 50%
6 ROW ..... ADD 100%
8 ROW ..... ADD 150%

BIRDSCREEN MULTIPLIERS:
- 1/2" EXPANDED ALUMINUM - STANDARD
- ALUMINUM INSECT SCREEN - LIST x 1.10

FINISHES:
- MILL FINISH ..... STANDARD
- AIR DRY PRIMER ..... LIST x 1.40
- POWDER COAT ..... LIST x 1.50
- KYNAR FINISHES ..... LIST x 1.80
- ANODIZED FINISHES ... CONSULT FACTORY

NOTE: PLEASE ALLOW AN ADDITIONAL 5 DAYS LEAD TIME FOR PAINTED OR ANODIZED FINISHES.

AIR-RITE MANUFACTURING

SUBMITTAL/FABRICATION DETAIL: LOUVERED PENTHOUSE STORM SHIELD

MODEL: LPE-SSH

SIDE VIEW

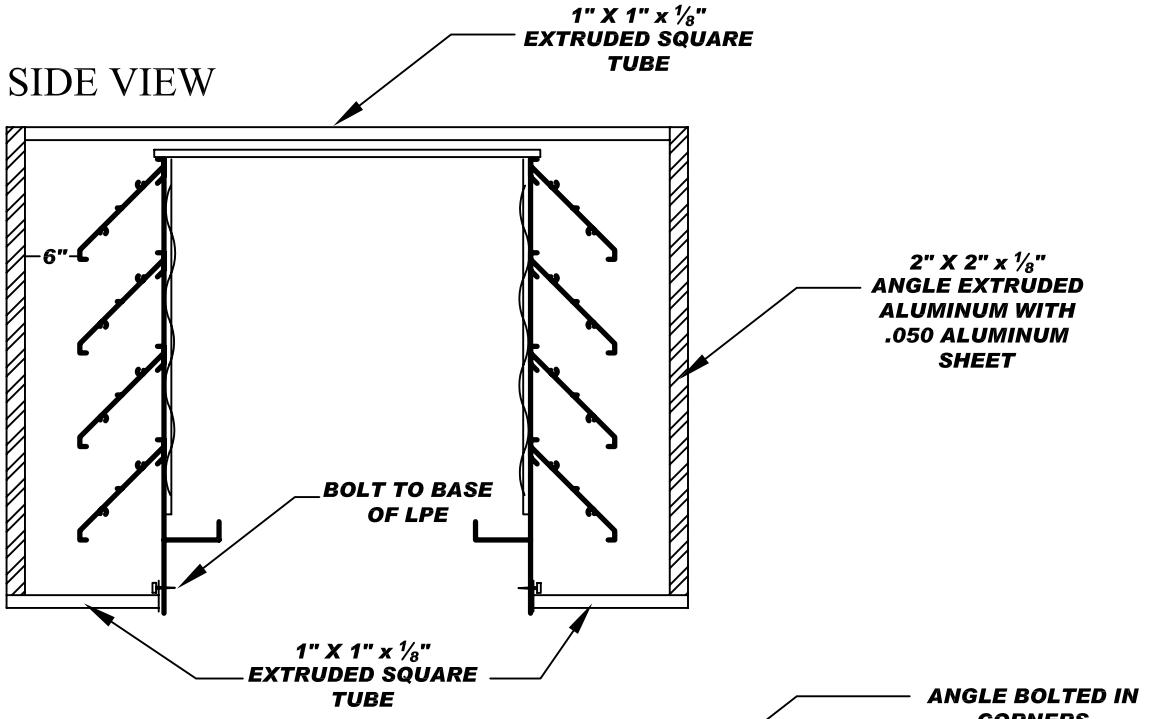

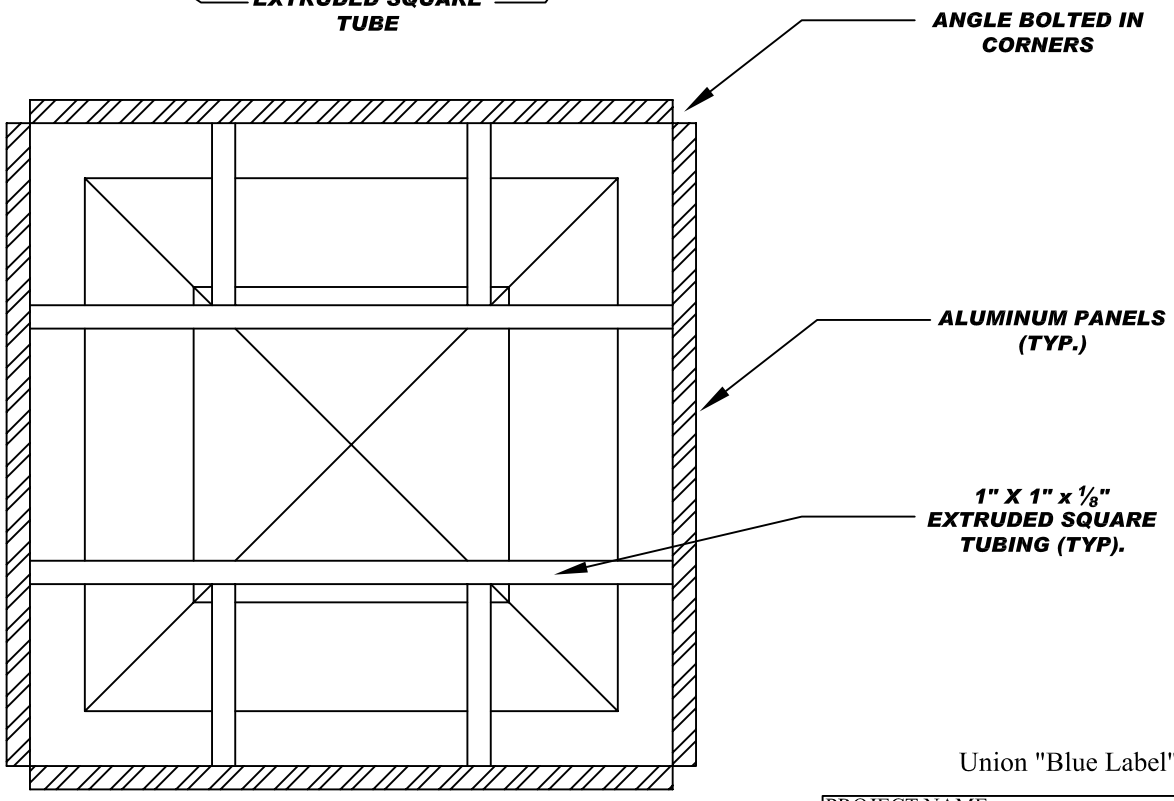

TOP VIEW

Union "Blue Label" Made.

PROJECT NAME:	
W/O #:	
TAG #:	
CONTRACTOR:	
SUBMITTED BY:	

PAGE: LPE-SSH

AIR-RITE MFG. RESERVES THE RIGHT TO CHANGE SPECIFICATIONS WITHOUT NOTICE.

AIR–RITE MANUFACTURING

SUBMITTAL/FABRICATION DETAIL: Elevator Penthouse
MODEL: LPE-G

The LPE-G Penthouse Elevator Vent is a gravity ventilator with three sides fabricated of heavy gauge 6063-T5 aluminum stationary LE-1 Louver model and a view port made of 1/4" annealed glass

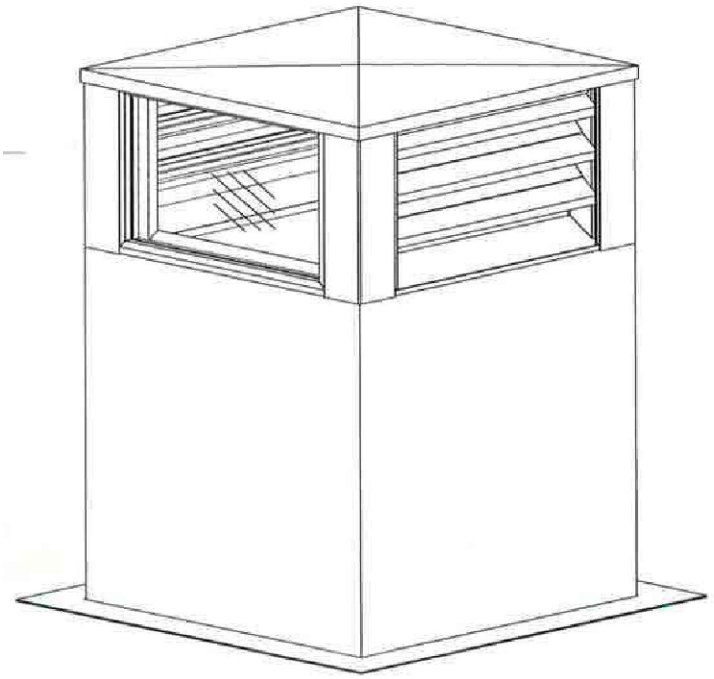

*** shown with optional C-2 curb ***

STANDARD CONSTRUCTION

1. Heavy Gauge Extruded 6063-T5 Aluminum 4" x .094 nominal wall thickness
2. 3/4" x .051" flattened expanded aluminum screen mounted inside
3. .050 formed aluminum lid
4. Heavy Gauge 6063-T5 aluminum 4" x .094 nominal wall thickness boxed corners
5. STANDARD FINISH - MILL
6. 1/4" Annealed glass

*****Contact manufacture for pricing *****

QTY.	SIZE

Options:

1. Insect screen
2. Noise Dampening insulated Lid
3. A variety of architectural finishes including:
   - clear / integral color anodize
   - Baked enamel
   - Powder coat
   - Kynar paint
4. A variety of sizes

Union "Blue Label" Made.

PROJECT NAME:
W/O #:
TAG #:
CONTRACTOR:
SUBMITTED BY:

PAGE: LPE-G

AIR-RITE MFG. RESERVES THE RIGHT TO CHANGE SPECIFICATIONS WITHOUT NOTICE.

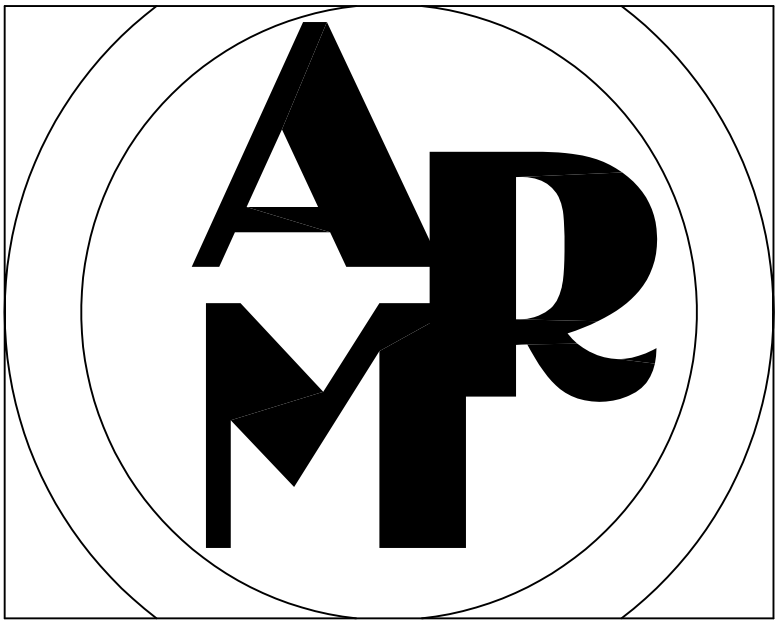

AIR-RITE MANUFACTURING, LLC

BURGLAR BARS

AIR-RITE MANUFACTURING

SUBMITTAL/FABRICATION DETAIL
MODEL: BB-1

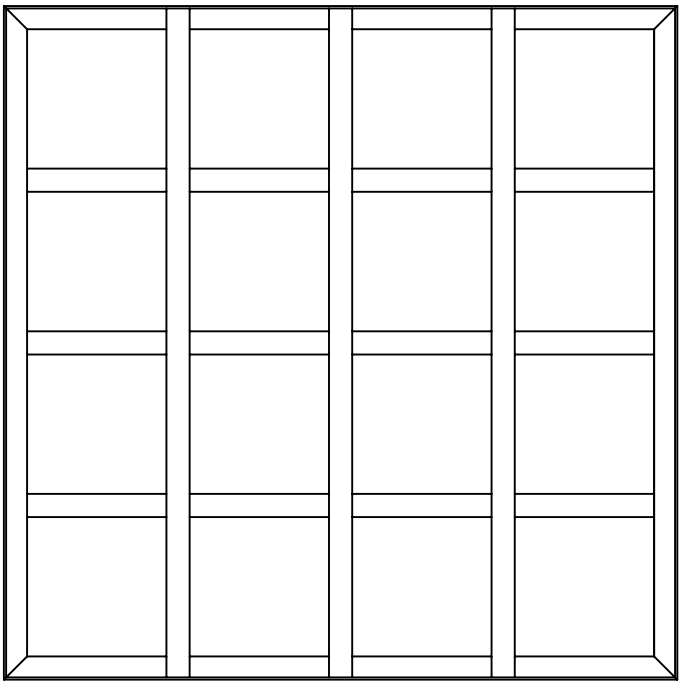

RECTANGULAR
BURGLAR BARS

QTY.	W x H

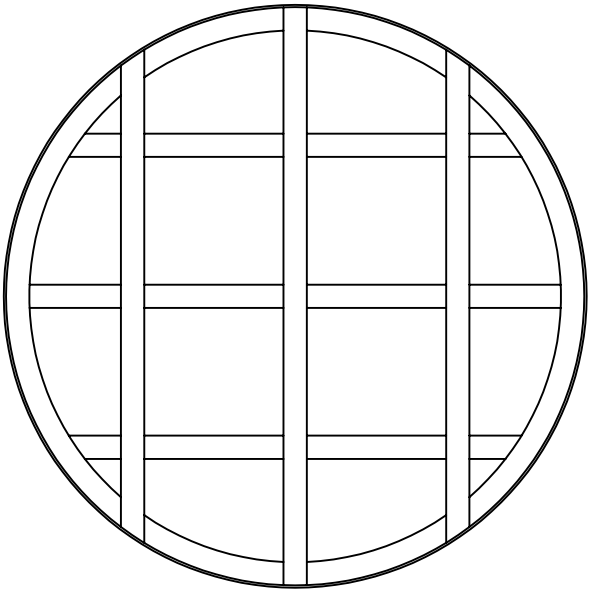

ROUND BURGLAR
BARS

QTY.	DIAMETER

STANDARD CONSTRUCTION

1. Webbing = ½" steel bar stock.
2. Frame = 1" x 1" x ⅛" thick steel angle.
3. Webbing welded @ 6" on center.

OPTIONAL CONSTRUCTION

☐ 1. Stainless Steel construction.
☐ 2. Powder Coating

Union "Blue Label" Made.

PROJECT NAME:
W/O #:
TAG #:
CONTRACTOR:
SUBMITTED BY:

PAGE: BB-1

AIR-RITE MFG. RESERVES THE RIGHT TO CHANGE
SPECIFICATIONS WITHOUT NOTICE.

AIR–RITE MANUFACTURING

MODEL: BDD-1

STANDARD DAMPER PRICING

ROUND BACK-DRAFT DAMPERS

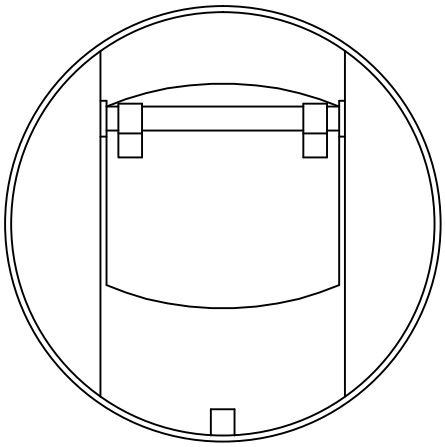

ADJUST SLIDE TYPE
COUNTERBALANCE.....ADD 15%

4" TO 5 ½"	96.00
6" TO 10"	122.00
10 ½" TO 14"	148.00
14 ½" TO 18"	174.00
18 ½" TO 22"	200.00
22 ½" TO 26"	226.00
27" TO 32"	252.00

CONTACT FACTORY FOR SIZES OVER 32"Ø.

ALL ALUMINUM CONSTRUCTION.....ADD 40%.

AIR-RITE MFG. RESERVES THE RIGHT TO CHANGE
SPECIFICATIONS WITHOUT NOTICE.

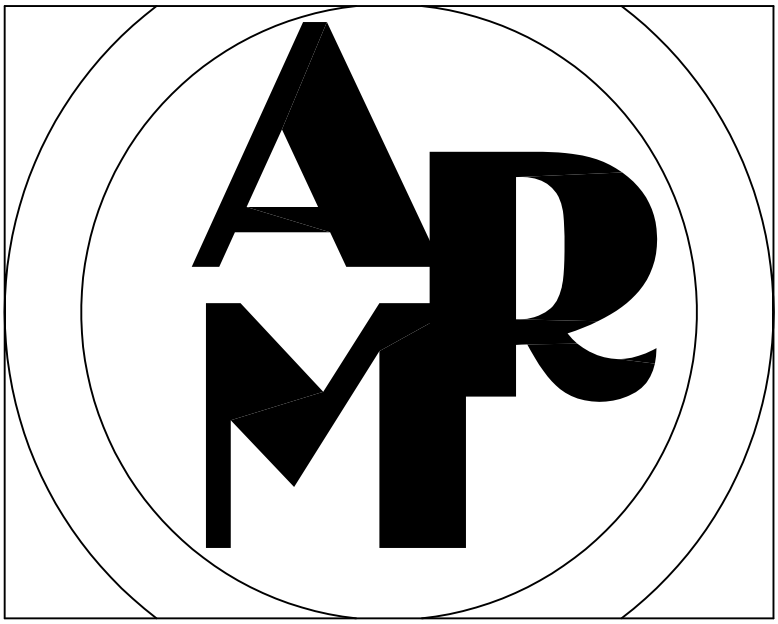

AIR-RITE MANUFACTURING, LLC

SLOT DIFFUSER PLENUMS

AIR-RITE MANUFACTURING

SUBMITTAL/FABRICATION DETAIL: SLOT DIFFUSER PLENUM
MODEL: SDP-1

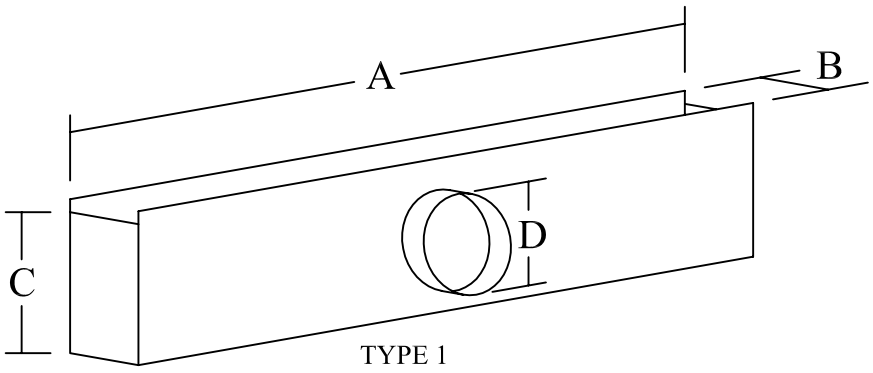

TYPE 1

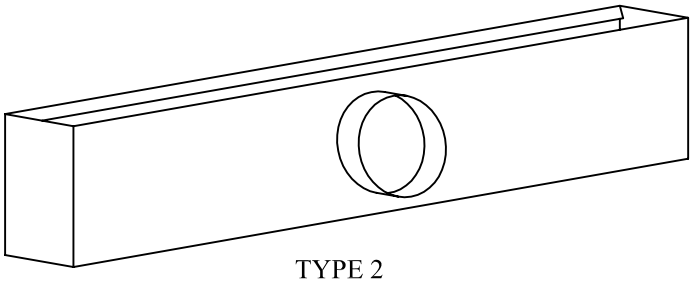

TYPE 2

QTY.	A	B	C	D

STANDARD CONSTRUCTION:

1. **26 ga. galvanized steel body.**
2. **26 ga. collar.**
3. **½" fiberglass insulation.**
4. **Inlet sizes up to 12"Ø**

OPTIONAL CONSTRUCTION:

☐ **- No insulation.**
☐ **- Heavier guage construction.**
☐ **- Aluminum construction.**
☐ **- Damper blade in collar.**
☐ **- Inlet sizes greater than 12"Ø.**
☐ **- Multiple inlets.**

Union "Blue Label" Made.

PROJECT NAME:
W/O #:
TAG #:
CONTRACTOR:
SUBMITTED BY:

PAGE: SDP-1

AIR-RITE MFG. RESERVES THE RIGHT TO CHANGE SPECIFICATIONS WITHOUT NOTICE.

AIR-RITE MANUFACTURING

MODEL: SDP-1

STANDARD PLENUM PRICING

INSULATED SLOT DIFFUSER PLENUMS

NOMINAL LENGTH	SLOT QUANTITY							
	1	2	3	4	5	6	7	8
24"	68	80	88	100	112	122	136	152
36"	80	100	108	124	132	142	158	174
48"	92	116	124	138	152	168	188	208
60"	116	140	150	160	176	190	212	232
72"	152	184	196	212	222	236	256	276

ALUMINUM CONSTRUCTION ADD - 40%
MULTIPLE INLETS ADD PER INLET - 8%
INLET SIZES OVER 12"Ø ADD TO LIST - $4.00
NO INSULATION DEDUCT - 8%
DAMPER BLADE OPTION ADD TO LIST - $10.00

AIR-RITE MFG. RESERVES THE RIGHT TO CHANGE SPECIFICATIONS WITHOUT NOTICE.